aiwa SERVICE

CDC-X527M YU(S),YH(S)

SERVICE MANUAL

STEREO CAR CD STEREO

BASIC CD MECHANISM : BZG-3 BNF

Replace this Service Manual with "Revision Publishing" when it is issued.

aiwa

S/M Code No. 09-026-457-2T1

SIMPLE DATA

ACCESSORIES PARTS LIST - 1/1

! = ⚠SAFTY PARTS
C = Components marked
All components used on this model at the production line are shown in this service manual.
However, please note that not all components will be available as spare parts for after-sales service.
Components marked S and O are designated as spare parts for service and will be stocked at the spare parts centers.
Components marked X and R are not designated as spare parts for after sales service, and will not be stocked at the spare parts centers.

UNIT-NAME	!	C	REF-NO	PARTS-NO	PARTS-NAME	SUFFIX&MODEL	
						CDC-X527M YUSF	CDC-X527M YHSF
		O	AS1001	87-253-033-410	U+2-4 BLK	a	.
		O	AS1002	87-B10-141-010	NUT,5 TYPE-2	a	b
		O	AS1003	87-B10-143-010	UT1+5-15 W/O SLOT	a	b
		O	AS1004	87-B10-144-010	W,5.2-10-0.5	a	b
		O	AS1005	87-B10-145-010	W-SPR,5.3-8.5-1.5	a	b
		X	AS1006	87-B40-178-010	BAG,PV 0.04-100-250	a	b
		X	AS1007	87-B40-179-010	BAG,PV 0.04-50-100	a	b
		X	AS1008	87-B40-242-010	BAG,PV 0.04-70-100	a	b
		O	AS1009	88-ZG8-435-010	S-SCREW,VIT+2-4 PREC	.	b
		O	AS1010	8C-KCG-060-110	CASE,DFP C BLK	a	b
		X	AS1011	8C-KCG-233-010	CUSHION,DFP-CASE	a	b
		O	AS1012	8C-KCG-631-010	CONN ASSY,16P RENEWVERSION	a	b
		O	AS1013	8Z-KC1-231-110	HLDR,HALF -C	a	b
		O	AS1014	8Z-KC1-232-010	KEY,REMOVE -C	a	b
		O	AS1015	8Z-KC1-235-010	HLDR,REAR MTG	a	b
		O	AS1016	8Z-KC1-244-010	S-SCREW,5*6 TH+ TAPPING ST	a	b
		O	AS1017	8Z-KC1-250-010	S-SCREW,HEXAGON	a	b
		X	AS1018	8C-KCF-970-010	LBL,POP YU	.	b
		X	AS1019	87-B40-087-010	BAG,PV 0.04-250-350 PL	a	b
		X	AS1020	8C-KCF-851-010	CUSHION,LEFT AIS	a	b
						CDC-X527M YUSF	CDC-X527M YHSF
		X	AS1021	8C-KCF-852-010	CUSHION,RIGHT AIS	a	b
		X	AS1022	8C-KCF-854-010	PAD,A	a	b
		X	AS1023	8C-KCF-855-010	CTN,PRINTED 527M YUSF	a	.
		X	AS1024	8C-KCF-856-010	CTN,OUTER 527M YUSF	a	.
		X	AS1025	8C-KCF-857-010	CTN,PRINTED 527M YHSF	.	b
		X	AS1026	8C-KCF-858-010	CTN,OUTER 527M YHSF	.	b
		X	AS1027	8Z-KC1-871-010	CUSHION,DFP-GUARD	a	b
		X	AS1028	87-B40-454-010	BAG,PP 0.04-230-350 PL	a	b
		X	AS1029	87-B50-055-010	WARR-CARD,USA CUST/CAR AUDIO	a	.
		X	AS1030	87-B50-079-010	LIST,FACILITY(B)-0007	.	b
		X	AS1031	87-B50-081-010	WARR-CARD,CHINA CAR-0009	.	b
		X	AS1032	8B-KCF-904-110	SH,CD-R/RW YU,YL,YH,Y (7L)-I	a	b
		O	AS1033	8C-KCF-901-010	IB,YU(ESF)F X527M	a	.
		O	AS1034	8C-KCF-902-010	IB,YH(ECC)F X527M	.	b
		X	AS1035	8C-KCG-906-010	SH,SCREW DFP (14L)F	a	b
		X	AS1036	8C-KCG-907-010	SH,DEMO (14L)F	a	b
		O	AS1037	8C-KCG-911-010	IB,INST YU/YUC/YL(ESFP)F	a	.
		O	AS1038	8C-KCG-912-010	IB,INST YH/Y (ECCA)F	.	b

ELECTRICAL PARTS LIST - 1/11

! = ⚠SAFTY PARTS
C = Components marked
All components used on this model at the production line are shown in this service manual.
However, please note that not all components will be available as spare parts for after-sales service.
Components marked S and O are designated as spare parts for service and will be stocked at the spare parts centers.
Components marked X and R are not designated as spare parts for after sales service, and will not be stocked at the spare parts centers.

UNIT-NAME	!	C	REF-NO	PARTS-NO	PARTS-NAME	SUFFIX&MODEL	
						CDC-X527M YUSF	CDC-X527M YHSF
CHANGER	O	C	0751	87-010-787-080	C-CAP,U 0.022-25 K B GRM	a	b
CHANGER	S	D	0751	87-A40-817-040	C-ZENER,STZ6.8N	a	b
CHANGER	S	D	0752	87-A40-817-040	C-ZENER,STZ6.8N	a	b
CHANGER	S	D	0753	87-A40-817-040	C-ZENER,STZ6.8N	a	b
CHANGER	O	J	0751	8A-KC7-620-010	JACK,DIN 13P SKDS1302	a	b
CHANGER	S	Q	0751	87-A30-142-040	C-TR,DTA123EKA	a	b
CHANGER	S	Q	0752	87-A30-427-040	C-TR,DTC114EKA	a	b
CHANGER	X	R	0751	88-108-222-080	C-RES,U 2.2K-1/16W J	a	b
CHANGER	O	R	0752	88-108-102-080	C-RES,U 1K-1/16W J	a	b
CHANGER	O	R	0753	88-108-102-080	C-RES,U 1K-1/16W J	a	b
CHANGER	O	R	0754	88-108-102-080	C-RES,U 1K-1/16W J	a	b
CHANGER	O	R	0755	88-108-102-080	C-RES,U 1K-1/16W J	a	b
CHANGER	O	R	0756	88-108-102-080	C-RES,U 1K-1/16W J	a	b
CHANGER	O	R	0757	88-108-102-080	C-RES,U 1K-1/16W J	a	b
CHANGER	X	R	0761	88-108-472-080	C-RES,U 4.7K-1/16W J	a	b
CHANGER	X	R	0762	88-108-472-080	C-RES,U 4.7K-1/16W J	a	b
CHANGER	X	R	0763	88-108-392-080	C-RES,U 3.9K-1/16W J	a	b
CHANGER	X	R	0764	88-108-392-080	C-RES,U 3.9K-1/16W J	a	b
CONNECTION	O	C	0701	87-012-195-080	C-CAP,U 100P-50 J CH GRM	a	b
CONNECTION	O	C	0711	87-A10-047-080	C-CAP,U 1-10 Z F	a	b
						CDC-X527M YUSF	CDC-X527M YHSF
CONNECTION	O	C	0712	87-A10-047-080	C-CAP,U 1-10 Z F	a	b
CONNECTION	O	C	0731	87-A10-707-080	C-CAP,U 0.47-10 Z F	a	b
CONNECTION	O	C	0732	87-A10-707-080	C-CAP,U 0.47-10 Z F	a	b
CONNECTION	O	C	0735	87-012-278-080	C-CAP,U 2200P-50 K B GRM	a	b
CONNECTION	O	C	0736	87-012-278-080	C-CAP,U 2200P-50 K B GRM	a	b
CONNECTION	O	C	0761	87-A10-707-080	C-CAP,U 0.47-10 Z F	a	b
CONNECTION	O	C	0762	87-A10-707-080	C-CAP,U 0.47-10 Z F	a	b
CONNECTION	O	CON	0701	87-A61-219-010	CONN,20P H 52089-2020	a	b
CONNECTION	O	CON	0702	88-KTA-603-010	CONN,15P CAM-B68	a	b
CONNECTION	S	D	0701	87-017-932-080	ZENER,MTZJ6.2B	a	b
CONNECTION	S	D	0702	87-017-932-080	ZENER,MTZJ6.2B	a	b
CONNECTION	S	D	0703	87-017-932-080	ZENER,MTZJ6.2B	a	b
CONNECTION	S	D	0704	87-017-932-080	ZENER,MTZJ6.2B	a	b
CONNECTION	S	D	0705	87-017-932-080	ZENER,MTZJ6.2B	a	b
CONNECTION	S	D	0706	87-017-932-080	ZENER,MTZJ6.2B	a	b
CONNECTION	S	D	0707	87-017-932-080	ZENER,MTZJ6.2B	a	b
CONNECTION	S	D	0708	87-017-932-080	ZENER,MTZJ6.2B	a	b
CONNECTION	X	JR	0101	88-118-000-080	C-JUMPER,S	a	b
CONNECTION	X	JR	0102	88-118-000-080	C-JUMPER,S	a	b
CONNECTION	X	JR	0103	88-118-000-080	C-JUMPER,S	a	b
						CDC-X527M YUSF	CDC-X527M YHSF
CONNECTION	X	JR	0104	88-118-000-080	C-JUMPER,S	a	b
CONNECTION	X	JR	0105	88-118-000-080	C-JUMPER,S	a	b
CONNECTION	X	JR	0106	88-118-000-080	C-JUMPER,S	a	b
CONNECTION	X	JR	0108	88-118-000-080	C-JUMPER,S	a	b
CONNECTION	X	JR	0109	88-118-000-080	C-JUMPER,S	a	b
CONNECTION	X	JR	0110	88-118-000-080	C-JUMPER,S	a	b
CONNECTION	X	JR	0111	88-118-000-080	C-JUMPER,S	a	b
CONNECTION	X	JR	0113	88-118-000-080	C-JUMPER,S	a	b
CONNECTION	X	JR	0116	88-118-000-080	C-JUMPER,S	a	b
CONNECTION	X	JR	0117	88-118-000-080	C-JUMPER,S	a	b
CONNECTION	X	JR	0118	88-118-000-080	C-JUMPER,S	a	b
CONNECTION	X	JR	0119	88-118-000-080	C-JUMPER,S	a	b
CONNECTION	X	JR	0120	88-118-000-080	C-JUMPER,S	a	b
CONNECTION	X	JR	0122	88-118-000-080	C-JUMPER,S	a	b
CONNECTION	X	JR	0123	88-118-000-080	C-JUMPER,S	a	b
CONNECTION	X	JR	0125	88-118-000-080	C-JUMPER,S	a	b
CONNECTION	X	JR	0127	88-118-000-080	C-JUMPER,S	a	b
CONNECTION	X	JR	0128	88-118-000-080	C-JUMPER,S	a	b
CONNECTION	X	JR	0129	88-118-000-080	C-JUMPER,S	a	b
CONNECTION	X	JR	0130	88-118-000-080	C-JUMPER,S	a	b
						CDC-X527M YUSF	CDC-X527M YHSF
CONNECTION	X	JR	0131	88-118-000-080	C-JUMPER,S	a	b
CONNECTION	X	JR	0132	88-118-000-080	C-JUMPER,S	a	b
CONNECTION	X	JR	0133	88-118-000-080	C-JUMPER,S	a	b
CONNECTION	X	JR	0134	88-118-000-080	C-JUMPER,S	a	b
CONNECTION	X	JR	0135	88-118-000-080	C-JUMPER,S	a	b
CONNECTION	X	JR	0136	88-118-000-080	C-JUMPER,S	a	b
CONNECTION	X	JR	0137	88-118-000-080	C-JUMPER,S	a	b
CONNECTION	X	JR	0138	88-118-000-080	C-JUMPER,S	a	b
CONNECTION	X	JR	0501	88-129-000-080	C-JUMPER, 3216	a	b
CONNECTION	X	JR	0502	88-129-000-080	C-JUMPER, 3216	a	b
CONNECTION	X	JR	0503	88-129-000-080	C-JUMPER, 3216	a	b
CONNECTION	X	JR	0504	88-129-000-080	C-JUMPER, 3216	a	b
CONNECTION	X	JR	0505	88-129-000-080	C-JUMPER, 3216	a	b
CONNECTION	X	JR	0506	88-129-000-080	C-JUMPER, 3216	a	b
CONNECTION	X	JR	0507	88-129-000-080	C-JUMPER, 3216	a	b
CONNECTION	X	JR	0508	88-129-000-080	C-JUMPER, 3216	a	b
CONNECTION	X	JR	0509	88-129-000-080	C-JUMPER, 3216	a	b
CONNECTION	X	JR	0510	88-129-000-080	C-JUMPER, 3216	a	b
CONNECTION	X	JR	0511	88-129-000-080	C-JUMPER, 3216	a	b
CONNECTION	X	JR	0513	88-129-000-080	C-JUMPER, 3216	a	b

ELECTRICAL PARTS LIST - 2/11

! = ⚠SAFTY PARTS
C = Components marked
All components used on this model at the production line are shown in this service manual.
However, please note that not all components will be available as spare parts for after-sales service.
Components marked S and O are designated as spare parts for service and will be stocked at the spare parts centers.
Components marked X and R are not designated as spare parts for after sales service, and will not be stocked at the spare parts centers.

UNIT-NAME	!	C	REF-NO	PARTS-NO	PARTS-NAME	SUFFIX&MODEL	
						CDC-X527M YUSF	CDC-X527M YHSF
CONNECTION		X	JR 0514	88-129-000-080	C-JUMPER, 3216	a	b
CONNECTION		X	JR 0515	88-129-000-080	C-JUMPER, 3216	a	b
CONNECTION		X	JR 0516	88-129-000-080	C-JUMPER, 3216	a	b
CONNECTION		X	JR 0517	88-129-000-080	C-JUMPER, 3216	a	b
CONNECTION		X	JR 0518	88-129-000-080	C-JUMPER, 3216	a	b
CONNECTION		X	JR 0519	88-129-000-080	C-JUMPER, 3216	a	b
CONNECTION		X	JR 0520	88-129-000-080	C-JUMPER, 3216	a	b
CONNECTION		X	JR 0521	88-129-000-080	C-JUMPER, 3216	a	b
CONNECTION		X	JR 0523	88-129-000-080	C-JUMPER, 3216	a	b
CONNECTION		X	JR 0524	88-129-000-080	C-JUMPER, 3216	a	b
CONNECTION		X	JR 0525	88-129-000-080	C-JUMPER, 3216	a	b
CONNECTION		X	JR 0526	88-129-000-080	C-JUMPER, 3216	a	b
CONNECTION		X	JR 0530	88-129-000-080	C-JUMPER, 3216	a	b
CONNECTION		X	JR 0531	88-129-000-080	C-JUMPER, 3216	a	b
CONNECTION		X	JR 0532	88-129-000-080	C-JUMPER, 3216	a	b
CONNECTION		X	JR 0533	88-129-000-080	C-JUMPER, 3216	a	b
CONNECTION		X	JR 0534	88-129-000-080	C-JUMPER, 3216	a	b
CONNECTION		X	JR 0535	88-129-000-080	C-JUMPER, 3216	a	b
CONNECTION		X	JR 0536	88-129-000-080	C-JUMPER, 3216	a	b
CONNECTION		X	JR 0537	88-129-000-080	C-JUMPER, 3216	a	b
						CDC-X527M YUSF	CDC-X527M YHSF
CONNECTION		X	JR 0538	88-129-000-080	C-JUMPER, 3216	a	b
CONNECTION		X	JR 0539	88-129-000-080	C-JUMPER, 3216	a	b
CONNECTION		X	JR 0540	88-129-000-080	C-JUMPER, 3216	a	b
CONNECTION		X	JR 0541	88-129-000-080	C-JUMPER, 3216	a	b
CONNECTION		X	JR 0542	88-129-000-080	C-JUMPER, 3216	a	b
CONNECTION		X	JR 0543	88-129-000-080	C-JUMPER, 3216	a	b
CONNECTION		X	JW 0101	88-100-000-010	PLATING-JW, 0.58 SN95	a	b
CONNECTION		X	JW 0102	88-100-000-010	PLATING-JW, 0.58 SN95	a	b
CONNECTION		X	JW 0103	88-100-000-010	PLATING-JW, 0.58 SN95	a	b
CONNECTION		X	JW 0104	88-100-000-010	PLATING-JW, 0.58 SN95	a	b
CONNECTION		X	JW 0105	88-100-000-010	PLATING-JW, 0.58 SN95	a	b
CONNECTION		X	JW 0106	88-100-000-010	PLATING-JW, 0.58 SN95	a	b
CONNECTION		X	JW 0107	88-100-000-010	PLATING-JW, 0.58 SN95	a	b
CONNECTION		X	JW 0108	88-100-000-010	PLATING-JW, 0.58 SN95	a	b
CONNECTION		X	JW 0109	88-100-000-010	PLATING-JW, 0.58 SN95	a	b
CONNECTION		X	JW 0110	88-100-000-010	PLATING-JW, 0.58 SN95	a	b
CONNECTION		X	JW 0111	88-100-000-010	PLATING-JW, 0.58 SN95	a	b
CONNECTION		X	JW 0112	88-100-000-010	PLATING-JW, 0.58 SN95	a	b
CONNECTION		X	JW 0113	88-100-000-010	PLATING-JW, 0.58 SN95	a	b
CONNECTION		X	JW 0114	88-100-000-010	PLATING-JW, 0.58 SN95	a	b
						CDC-X527M YUSF	CDC-X527M YHSF
CONNECTION		X	JW 0115	88-100-000-010	PLATING-JW, 0.58 SN95	a	b
CONNECTION		X	JW 0116	88-100-000-010	PLATING-JW, 0.58 SN95	a	b
CONNECTION		X	JW 0117	88-100-000-010	PLATING-JW, 0.58 SN95	a	b
CONNECTION		X	JW 0118	88-100-000-010	PLATING-JW, 0.58 SN95	a	b
CONNECTION		X	JW 0119	88-100-000-010	PLATING-JW, 0.58 SN95	a	b
CONNECTION		X	JW 0120	88-100-000-010	PLATING-JW, 0.58 SN95	a	b
CONNECTION		X	JW 0121	88-100-000-010	PLATING-JW, 0.58 SN95	a	b
CONNECTION		X	JW 0122	88-100-000-010	PLATING-JW, 0.58 SN95	a	b
CONNECTION		X	JW 0123	88-100-000-010	PLATING-JW, 0.58 SN95	a	b
CONNECTION		X	JW 0124	88-100-000-010	PLATING-JW, 0.58 SN95	a	b
CONNECTION		X	JW 0125	88-100-000-010	PLATING-JW, 0.58 SN95	a	b
CONNECTION		X	JW 0126	88-100-000-010	PLATING-JW, 0.58 SN95	a	b
CONNECTION		X	JW 0127	88-100-000-010	PLATING-JW, 0.58 SN95	a	b
CONNECTION		X	JW 0128	88-100-000-010	PLATING-JW, 0.58 SN95	a	b
CONNECTION		X	JW 0129	88-100-000-010	PLATING-JW, 0.58 SN95	a	b
CONNECTION		X	JW 0130	88-100-000-010	PLATING-JW, 0.58 SN95	a	b
CONNECTION		X	JW 0131	88-100-000-010	PLATING-JW, 0.58 SN95	a	b
CONNECTION		X	JW 0132	88-100-000-010	PLATING-JW, 0.58 SN95	a	b
CONNECTION		X	JW 0133	88-100-000-010	PLATING-JW, 0.58 SN95	a	b
CONNECTION		X	JW 0134	88-100-000-010	PLATING-JW, 0.58 SN95	a	b
						CDC-X527M YUSF	CDC-X527M YHSF
CONNECTION		X	JW 0135	88-100-000-010	PLATING-JW, 0.58 SN95	a	b
CONNECTION		X	JW 0136	88-100-000-010	PLATING-JW, 0.58 SN95	a	b
CONNECTION		X	JW 0137	88-100-000-010	PLATING-JW, 0.58 SN95	a	b
CONNECTION		X	JW 0138	88-100-000-010	PLATING-JW, 0.58 SN95	a	b
CONNECTION		X	JW 0139	88-100-000-010	PLATING-JW, 0.58 SN95	a	b
CONNECTION		X	JW 0140	88-100-000-010	PLATING-JW, 0.58 SN95	a	b
CONNECTION		X	JW 0141	88-100-000-010	PLATING-JW, 0.58 SN95	a	b
CONNECTION		X	JW 0142	88-100-000-010	PLATING-JW, 0.58 SN95	a	b
CONNECTION		X	JW 0143	88-100-000-010	PLATING-JW, 0.58 SN95	a	b
CONNECTION		X	JW 0144	88-100-000-010	PLATING-JW, 0.58 SN95	a	b
CONNECTION		X	JW 0145	88-100-000-010	PLATING-JW, 0.58 SN95	a	b
CONNECTION		X	JW 0146	88-100-000-010	PLATING-JW, 0.58 SN95	a	b
CONNECTION		X	JW 0147	88-100-000-010	PLATING-JW, 0.58 SN95	a	b
CONNECTION		X	JW 0148	88-100-000-010	PLATING-JW, 0.58 SN95	a	b
CONNECTION		X	JW 0149	88-100-000-010	PLATING-JW, 0.58 SN95	a	b
CONNECTION		X	JW 0150	88-100-000-010	PLATING-JW, 0.58 SN95	a	b
CONNECTION		X	JW 0151	88-100-000-010	PLATING-JW, 0.58 SN95	a	b
CONNECTION		X	JW 0152	88-100-000-010	PLATING-JW, 0.58 SN95	a	b
CONNECTION		X	JW 0153	88-100-000-010	PLATING-JW, 0.58 SN95	a	b
CONNECTION		X	JW 0154	88-100-000-010	PLATING-JW, 0.58 SN95	a	b

ELECTRICAL PARTS LIST - 3/11

! = ⚠SAFTY PARTS
C = Components marked
All components used on this model at the production line are shown in this service manual.
However, please note that not all components will be available as spare parts for after-sales service.
Components marked S and O are designated as spare parts for service and will be stocked at the spare parts centers.
Components marked X and R are not designated as spare parts for after sales service, and will not be stocked at the spare parts centers.

UNIT-NAME	!	C	REF-NO	PARTS-NO	PARTS-NAME	SUFFIX&MODEL	
						CDC-X527M YUSF	CDC-X527M YHSF
CONNECTION		X	JW 0155	88-100-000-010	PLATING-JW, 0.58 SN95	a	b
CONNECTION		X	JW 0156	88-100-000-010	PLATING-JW, 0.58 SN95	a	b
CONNECTION		X	JW 0157	88-100-000-010	PLATING-JW, 0.58 SN95	a	b
CONNECTION		X	JW 0158	88-100-000-010	PLATING-JW, 0.58 SN95	a	b
CONNECTION		X	JW 0159	88-100-000-010	PLATING-JW, 0.58 SN95	a	b
CONNECTION		X	JW 0160	88-100-000-010	PLATING-JW, 0.58 SN95	a	b
CONNECTION		X	JW 0161	88-100-000-010	PLATING-JW, 0.58 SN95	a	b
CONNECTION		X	JW 0162	88-100-000-010	PLATING-JW, 0.58 SN95	a	b
CONNECTION		X	JW 0163	88-100-000-010	PLATING-JW, 0.58 SN95	a	b
CONNECTION		X	JW 0164	88-100-000-010	PLATING-JW, 0.58 SN95	a	b
CONNECTION		X	JW 0165	88-100-000-010	PLATING-JW, 0.58 SN95	a	b
CONNECTION		X	JW 0166	88-100-000-010	PLATING-JW, 0.58 SN95	a	b
CONNECTION		X	JW 0167	88-100-000-010	PLATING-JW, 0.58 SN95	a	b
CONNECTION		X	JW 0168	88-100-000-010	PLATING-JW, 0.58 SN95	a	b
CONNECTION		X	JW 0169	88-100-000-010	PLATING-JW, 0.58 SN95	a	b
CONNECTION		X	JW 0170	88-100-000-010	PLATING-JW, 0.58 SN95	a	b
CONNECTION		X	JW 0171	88-100-000-010	PLATING-JW, 0.58 SN95	a	b
CONNECTION		X	JW 0172	88-100-000-010	PLATING-JW, 0.58 SN95	a	b
CONNECTION		X	JW 0173	88-100-000-010	PLATING-JW, 0.58 SN95	a	b
CONNECTION		X	JW 0174	88-100-000-010	PLATING-JW, 0.58 SN95	a	b
						CDC-X527M YUSF	CDC-X527M YHSF
CONNECTION		X	JW 0175	88-100-000-010	PLATING-JW, 0.58 SN95	a	b
CONNECTION		X	JW 0176	88-100-000-010	PLATING-JW, 0.58 SN95	a	b
CONNECTION		X	JW 0178	88-100-000-010	PLATING-JW, 0.58 SN95	a	b
CONNECTION		X	JW 0179	88-100-000-010	PLATING-JW, 0.58 SN95	a	b
CONNECTION		X	JW 0180	88-100-000-010	PLATING-JW, 0.58 SN95	a	b
CONNECTION		X	JW 0181	88-100-000-010	PLATING-JW, 0.58 SN95	a	b
CONNECTION		X	JW 0182	88-100-000-010	PLATING-JW, 0.58 SN95	a	b
CONNECTION		X	JW 0183	88-100-000-010	PLATING-JW, 0.58 SN95	a	b
CONNECTION		X	JW 0184	88-100-000-010	PLATING-JW, 0.58 SN95	a	b
CONNECTION		X	JW 0185	88-100-000-010	PLATING-JW, 0.58 SN95	a	b
CONNECTION		X	JW 0186	88-100-000-010	PLATING-JW, 0.58 SN95	a	b
CONNECTION		X	JW 0187	88-100-000-010	PLATING-JW, 0.58 SN95	a	b
CONNECTION		X	JW 0188	88-100-000-010	PLATING-JW, 0.58 SN95	a	b
CONNECTION		X	JW 0189	88-100-000-010	PLATING-JW, 0.58 SN95	a	b
CONNECTION		X	JW 0190	88-100-000-010	PLATING-JW, 0.58 SN95	a	b
CONNECTION		X	JW 0191	88-100-000-010	PLATING-JW, 0.58 SN95	a	b
CONNECTION		X	JW 0192	88-100-000-010	PLATING-JW, 0.58 SN95	a	b
CONNECTION		X	JW 0193	88-100-000-010	PLATING-JW, 0.58 SN95	a	b
CONNECTION		X	JW 0194	88-100-000-010	PLATING-JW, 0.58 SN95	a	b
CONNECTION		X	JW 0195	88-100-000-010	PLATING-JW, 0.58 SN95	a	b
						CDC-X527M YUSF	CDC-X527M YHSF
CONNECTION		X	JW 0196	88-100-000-010	PLATING-JW, 0.58 SN95	a	b
CONNECTION		X	JW 0197	88-100-000-010	PLATING-JW, 0.58 SN95	a	b
CONNECTION		X	JW 0198	88-100-000-010	PLATING-JW, 0.58 SN95	a	b
CONNECTION		X	JW 0199	88-100-000-010	PLATING-JW, 0.58 SN95	a	b
CONNECTION		X	JW 0200	88-100-000-010	PLATING-JW, 0.58 SN95	a	b
CONNECTION		X	JW 0201	88-100-000-010	PLATING-JW, 0.58 SN95	a	b
CONNECTION		X	JW 0202	88-100-000-010	PLATING-JW, 0.58 SN95	a	b
CONNECTION		X	JW 0203	88-100-000-010	PLATING-JW, 0.58 SN95	a	b
CONNECTION		X	JW 0204	88-100-000-010	PLATING-JW, 0.58 SN95	a	b
CONNECTION		X	JW 0205	88-100-000-010	PLATING-JW, 0.58 SN95	a	b
CONNECTION		X	JW 0206	88-100-000-010	PLATING-JW, 0.58 SN95	a	b
CONNECTION		X	JW 0207	88-100-000-010	PLATING-JW, 0.58 SN95	a	b
CONNECTION		X	JW 0208	88-100-000-010	PLATING-JW, 0.58 SN95	a	b
CONNECTION		X	JW 0209	88-100-000-010	PLATING-JW, 0.58 SN95	a	b
CONNECTION		X	JW 0210	88-100-000-010	PLATING-JW, 0.58 SN95	a	b
CONNECTION		X	JW 0211	88-100-000-010	PLATING-JW, 0.58 SN95	a	b
CONNECTION		X	JW 0212	88-100-000-010	PLATING-JW, 0.58 SN95	a	b
CONNECTION		X	JW 0213	88-100-000-010	PLATING-JW, 0.58 SN95	a	b
CONNECTION		X	JW 0214	88-100-000-010	PLATING-JW, 0.58 SN95	a	b
CONNECTION		X	JW 0215	88-100-000-010	PLATING-JW, 0.58 SN95	a	b
						CDC-X527M YUSF	CDC-X527M YHSF
CONNECTION		X	JW 0216	88-100-000-010	PLATING-JW, 0.58 SN95	a	b
CONNECTION		X	JW 0217	88-100-000-010	PLATING-JW, 0.58 SN95	a	b
CONNECTION		X	JW 0218	88-100-000-010	PLATING-JW, 0.58 SN95	a	b
CONNECTION		X	JW 0219	88-100-000-010	PLATING-JW, 0.58 SN95	a	b
CONNECTION		X	JW 0220	88-100-000-010	PLATING-JW, 0.58 SN95	a	b
CONNECTION		X	JW 0221	88-100-000-010	PLATING-JW, 0.58 SN95	a	b
CONNECTION		X	JW 0222	88-100-000-010	PLATING-JW, 0.58 SN95	a	b
CONNECTION		X	JW 0223	88-100-000-010	PLATING-JW, 0.58 SN95	a	b
CONNECTION		X	JW 0224	88-100-000-010	PLATING-JW, 0.58 SN95	a	b
CONNECTION		X	JW 0225	88-100-000-010	PLATING-JW, 0.58 SN95	a	b
CONNECTION		X	JW 0226	88-100-000-010	PLATING-JW, 0.58 SN95	a	b
CONNECTION		X	JW 0227	88-100-000-010	PLATING-JW, 0.58 SN95	a	b
CONNECTION		X	JW 0228	88-100-000-010	PLATING-JW, 0.58 SN95	a	b
CONNECTION		X	JW 0229	88-100-000-010	PLATING-JW, 0.58 SN95	a	b
CONNECTION		X	JW 0230	88-100-000-010	PLATING-JW, 0.58 SN95	a	b
CONNECTION		X	JW 0231	88-100-000-010	PLATING-JW, 0.58 SN95	a	b
CONNECTION		X	JW 0232	88-100-000-010	PLATING-JW, 0.58 SN95	a	b
CONNECTION		X	JW 0233	88-100-000-010	PLATING-JW, 0.58 SN95	a	b
CONNECTION		X	JW 0234	88-100-000-010	PLATING-JW, 0.58 SN95	a	b
CONNECTION		X	JW 0235	88-100-000-010	PLATING-JW, 0.58 SN95	a	b

ELECTRICAL PARTS LIST - 4/11

! = ⚠SAFTY PARTS
C = Components marked
All components used on this model at the production line are shown in this service manual.
However, please note that not all components will be available as spare parts for after-sales service.
Components marked S and O are designated as spare parts for service and will be stocked at the spare parts centers.
Components marked X and R are not designated as spare parts for after sales service, and will not be stocked at the spare parts centers.

UNIT-NAME	!	C	REF-NO	PARTS-NO	PARTS-NAME	SUFFIX&MODEL	
						CDC-X527M YUSF	CDC-X527M YHSF
CONNECTION		X	JW 0236	88-100-000-010	PLATING-JW, 0.58 SN95	a	b
CONNECTION		X	JW 0237	88-100-000-010	PLATING-JW, 0.58 SN95	a	b
CONNECTION		X	JW 0238	88-100-000-010	PLATING-JW, 0.58 SN95	a	b
CONNECTION		X	JW 0239	88-100-000-010	PLATING-JW, 0.58 SN95	a	b
CONNECTION		X	JW 0240	88-100-000-010	PLATING-JW, 0.58 SN95	a	b
CONNECTION		X	JW 0241	88-100-000-010	PLATING-JW, 0.58 SN95	a	b
CONNECTION		X	JW 0242	88-100-000-010	PLATING-JW, 0.58 SN95	a	b
CONNECTION		X	JW 0243	88-100-000-010	PLATING-JW, 0.58 SN95	a	b
CONNECTION		X	JW 0244	88-100-000-010	PLATING-JW, 0.58 SN95	a	b
CONNECTION		X	JW 0245	88-100-000-010	PLATING-JW, 0.58 SN95	a	b
CONNECTION		X	JW 0246	88-100-000-010	PLATING-JW, 0.58 SN95	a	b
CONNECTION		X	JW 0247	88-100-000-010	PLATING-JW, 0.58 SN95	a	b
CONNECTION		X	JW 0248	88-100-000-010	PLATING-JW, 0.58 SN95	a	b
CONNECTION		O	L 0731	87-005-906-080	C-COIL,S 10UH K LK2125	a	b
CONNECTION		O	R 0701	88-108-102-080	C-RES,U 1K-1/16W J	a	b
CONNECTION		O	R 0702	88-108-102-080	C-RES,U 1K-1/16W J	a	b
CONNECTION		O	R 0703	88-108-102-080	C-RES,U 1K-1/16W J	a	b
CONNECTION		O	R 0704	88-108-102-080	C-RES,U 1K-1/16W J	a	b
CONNECTION		O	R 0705	88-108-102-080	C-RES,U 1K-1/16W J	a	b
CONNECTION		O	R 0706	88-108-102-080	C-RES,U 1K-1/16W J	a	b
						CDC-X527M YUSF	CDC-X527M YHSF
CONNECTION		O	R 0707	88-108-102-080	C-RES,U 1K-1/16W J	a	b
CONNECTION		O	R 0708	88-108-102-080	C-RES,U 1K-1/16W J	a	b
CONNECTION		X	R 0709	88-121-100-080	RES,10-1/8W J	a	b
CONNECTION		X	R 0731	88-108-472-080	C-RES,U 4.7K-1/16W J	a	b
CONNECTION		X	R 0732	88-108-472-080	C-RES,U 4.7K-1/16W J	a	b
CONNECTION		O	R 0733	88-108-562-080	C-RES,U 5.6K-1/16W J	a	b
CONNECTION		O	R 0734	88-108-562-080	C-RES,U 5.6K-1/16W J	a	b
ELECTRICAL		O	C 0601	87-A10-047-080	C-CAP,U 1-10 Z F	a	b
ELECTRICAL		O	C 0604	87-012-273-080	C-CAP,U 820P-50 K B GRM	a	b
ELECTRICAL		O	C 0605	87-A10-260-080	C-CAP,U 0.1-16 K B	a	b
ELECTRICAL		O	C 0681	87-A10-047-080	C-CAP,U 1-10 Z F	a	b
ELECTRICAL		O	C 0923	87-A10-260-080	C-CAP,U 0.1-16 K B	a	b
ELECTRICAL		O	CON0601	88-KTA-602-010	C-CONN,15P CAM-B67	a	b
ELECTRICAL		S	D 0601	87-A40-817-040	C-ZENER,STZ6.8N	a	b
ELECTRICAL		S	D 0602	87-A40-817-040	C-ZENER,STZ6.8N	a	b
ELECTRICAL		S	D 0681	87-A40-817-040	C-ZENER,STZ6.8N	a	b
ELECTRICAL		S	IC 0601	87-A21-489-030	C-IC,LC75853NW	a	b
ELECTRICAL		O	IC 0681	87-A90-951-010	RCR UNIT,SBX1971-52	a	b
ELECTRICAL		O	J 0601	85-HRL-623-010	JACK,3.5 BLK ST BLK	a	b
ELECTRICAL		O	LCD0601	8C-KCG-616-010	LCD,CKC-F-G-H	a	b
						CDC-X527M YUSF	CDC-X527M YHSF
ELECTRICAL		O	LED0641	87-A91-355-040	C-LED,BR1112H-TR-RED	a	b
ELECTRICAL		O	LED0642	87-A91-355-040	C-LED,BR1112H-TR-RED	a	b
ELECTRICAL		O	LED0643	87-A91-355-040	C-LED,BR1112H-TR-RED	a	b
ELECTRICAL		O	LED0651	87-A91-355-040	C-LED,BR1112H-TR-RED	a	b
ELECTRICAL		O	LED0652	87-A91-355-040	C-LED,BR1112H-TR-RED	a	b
ELECTRICAL		O	LED0653	87-A91-355-040	C-LED,BR1112H-TR-RED	a	b
ELECTRICAL		O	LED0661	87-A41-085-010	LED,NSPW315BS WHT	a	b
ELECTRICAL		O	LED0671	87-A41-118-040	C-LED,SEC1E01C-1 BLU	a	b
ELECTRICAL		O	LED0672	87-A41-118-040	C-LED,SEC1E01C-1 BLU	a	b
ELECTRICAL		O	LED0673	87-A41-118-040	C-LED,SEC1E01C-1 BLU	a	b
ELECTRICAL		S	Q 0651	89-324-122-040	C-TR,2SC2412KR	a	b
ELECTRICAL		S	Q 0661	89-324-122-040	C-TR,2SC2412KR	a	b
ELECTRICAL		S	Q 0671	89-324-122-040	C-TR,2SC2412KR	a	b
ELECTRICAL		X	R 0604	88-108-683-080	C-RES,U 68K-1/16W J	a	b
ELECTRICAL		O	R 0605	88-108-102-080	C-RES,U 1K-1/16W J	a	b
ELECTRICAL		O	R 0606	88-108-102-080	C-RES,U 1K-1/16W J	a	b
ELECTRICAL		O	R 0607	88-108-102-080	C-RES,U 1K-1/16W J	a	b
ELECTRICAL		O	R 0608	88-108-102-080	C-RES,U 1K-1/16W J	a	b
ELECTRICAL		O	R 0609	88-108-102-080	C-RES,U 1K-1/16W J	a	b
ELECTRICAL		O	R 0610	88-108-103-080	C-RES,U 10K-1/16W J	a	b
						CDC-X527M YUSF	CDC-X527M YHSF
ELECTRICAL		X	R 0621	88-108-104-080	C-RES,U 100K-1/16W J	a	b
ELECTRICAL		X	R 0622	88-108-104-080	C-RES,U 100K-1/16W J	a	b
ELECTRICAL		X	R 0641	88-108-391-080	C-RES,U 390-1/16W J	a	b
ELECTRICAL		X	R 0651	88-108-561-080	C-RES,U 560-1/16W J	a	b
ELECTRICAL		X	R 0652	88-108-561-080	C-RES,U 560-1/16W J	a	b
ELECTRICAL		X	R 0653	88-108-561-080	C-RES,U 560-1/16W J	a	b
ELECTRICAL		X	R 0654	88-108-682-080	C-RES,U 6.8K-1/16W J	a	b
ELECTRICAL		X	R 0661	88-118-331-080	C-RES,S 330-1/10W J	a	b
ELECTRICAL		X	R 0662	88-108-682-080	C-RES,U 6.8K-1/16W J	a	b
ELECTRICAL		O	R 0663	88-108-102-080	C-RES,U 1K-1/16W J	a	b
ELECTRICAL		X	R 0671	88-108-391-080	C-RES,U 390-1/16W J	a	b
ELECTRICAL		X	R 0672	88-108-391-080	C-RES,U 390-1/16W J	a	b
ELECTRICAL		X	R 0673	88-108-391-080	C-RES,U 390-1/16W J	a	b
ELECTRICAL		X	R 0674	88-108-682-080	C-RES,U 6.8K-1/16W J	a	b
ELECTRICAL		X	R 0681	88-108-180-080	C-RES,U 18-1/16W J	a	b
ELECTRICAL		O	R 0682	88-108-102-080	C-RES,U 1K-1/16W J	a	b
ELECTRICAL		O	SW 0601	87-A90-164-080	SW,TACT SKQNAB(N)	a	b
ELECTRICAL		O	SW 0602	87-A90-164-080	SW,TACT SKQNAB(N)	a	b
ELECTRICAL		O	SW 0603	87-A90-164-080	SW,TACT SKQNAB(N)	a	b
ELECTRICAL		O	SW 0605	87-A90-164-080	SW,TACT SKQNAB(N)	a	b

ELECTRICAL PARTS LIST - 5/11

! = ⚠SAFTY PARTS
C = Components marked
All components used on this model at the production line are shown in this service manual.
However, please note that not all components will be available as spare parts for after-sales service.
Components marked S and O are designated as spare parts for service and will be stocked at the spare parts centers.
Components marked X and R are not designated as spare parts for after sales service, and will not be stocked at the spare parts centers.

UNIT-NAME	!	C	REF-NO	PARTS-NO	PARTS-NAME	SUFFIX&MODEL	
						CDC-X527M YUSF	CDC-X527M YHSF
ELECTRICAL		O	SW 0606	87-A90-164-080	SW,TACT SKQNAB(N)	a	b
ELECTRICAL		O	SW 0607	87-A90-164-080	SW,TACT SKQNAB(N)	a	b
ELECTRICAL		O	SW 0608	87-A90-164-080	SW,TACT SKQNAB(N)	a	b
ELECTRICAL		O	SW 0610	87-A90-164-080	SW,TACT SKQNAB(N)	a	b
ELECTRICAL		O	SW 0611	87-A90-164-080	SW,TACT SKQNAB(N)	a	b
ELECTRICAL		O	SW 0612	87-A91-987-080	SW,TACT SKQCAB	a	b
ELECTRICAL		O	SW 0613	87-A91-987-080	SW,TACT SKQCAB	a	b
ELECTRICAL		O	SW 0614	87-A91-987-080	SW,TACT SKQCAB	a	b
ELECTRICAL		O	SW 0615	87-036-339-080	C-SW,TACT SKQM	a	b
ELECTRICAL		O	SW 0616	87-A91-987-080	SW,TACT SKQCAB	a	b
ELECTRICAL		O	SW 0617	87-036-339-080	C-SW,TACT SKQM	a	b
ELECTRICAL		O	SW 0618	87-A91-987-080	SW,TACT SKQCAB	a	b
ELECTRICAL		O	SW 0621	87-A92-329-010	SW,RTRY SRP-1211VD	a	b
E-VOL		O	C 0401	87-A11-062-080	C-CAP,S 2.2-16 Z F	a	b
E-VOL		O	C 0402	87-A11-062-080	C-CAP,S 2.2-16 Z F	a	b
E-VOL		O	C 0403	87-012-276-080	C-CAP,U 1500P-50 K B GRM	a	b
E-VOL		O	C 0404	87-012-276-080	C-CAP,U 1500P-50 K B GRM	a	b
E-VOL		O	C 0405	87-A11-062-080	C-CAP,S 2.2-16 Z F	a	b
E-VOL		O	C 0406	87-A11-062-080	C-CAP,S 2.2-16 Z F	a	b
E-VOL		O	C 0407	87-010-220-080	C-CAP,S 0.018-25 K B GRM	a	b
						CDC-X527M YUSF	CDC-X527M YHSF
E-VOL		O	C 0408	87-010-220-080	C-CAP,S 0.018-25 K B GRM	a	b
E-VOL		O	C 0409	87-A10-047-080	C-CAP,U 1-10 Z F	a	b
E-VOL		O	C 0410	87-A10-047-080	C-CAP,U 1-10 Z F	a	b
E-VOL		O	C 0411	87-A10-781-080	C-CAP,U 0.15-10 K B	a	b
E-VOL		O	C 0412	87-A10-781-080	C-CAP,U 0.15-10 K B	a	b
E-VOL		O	C 0413	87-A10-781-080	C-CAP,U 0.15-10 K B	a	b
E-VOL		O	C 0414	87-A10-781-080	C-CAP,U 0.15-10 K B	a	b
E-VOL		O	C 0415	87-A10-047-080	C-CAP,U 1-10 Z F	a	b
E-VOL		O	C 0416	87-A10-047-080	C-CAP,U 1-10 Z F	a	b
E-VOL		O	C 0417	87-010-498-040	CAP,E 10-16 M 5L SRE	a	b
E-VOL		O	C 0418	87-010-498-040	CAP,E 10-16 M 5L SRE	a	b
E-VOL		O	C 0419	87-010-498-040	CAP,E 10-16 M 5L SRE	a	b
E-VOL		O	C 0420	87-010-498-040	CAP,E 10-16 M 5L SRE	a	b
E-VOL		O	C 0422	87-010-555-080	CAP,E 100-10 M 5L MA	a	b
E-VOL		O	C 0424	87-010-552-040	CAP,E 22-16 M 5L SRE	a	b
E-VOL		O	C 0425	87-010-498-040	CAP,E 10-16 M 5L SRE	a	b
E-VOL		O	C 0426	87-010-498-040	CAP,E 10-16 M 5L SRE	a	b
E-VOL		O	C 0427	87-010-498-040	CAP,E 10-16 M 5L SRE	a	b
E-VOL		O	C 0428	87-010-498-040	CAP,E 10-16 M 5L SRE	a	b
E-VOL		O	C 0429	87-012-270-080	C-CAP,U 470P-50 K B GRM	a	b
						CDC-X527M YUSF	CDC-X527M YHSF
E-VOL		O	C 0430	87-012-270-080	C-CAP,U 470P-50 K B GRM	a	b
E-VOL		O	C 0431	87-012-270-080	C-CAP,U 470P-50 K B GRM	a	b
E-VOL		O	C 0432	87-012-270-080	C-CAP,U 470P-50 K B GRM	a	b
E-VOL		O	C 0433	87-012-274-080	C-CAP,U 1000P-50 K B GRM	a	b
E-VOL		O	C 0434	87-010-497-040	CAP,E 4.7-35 M 5L SRE	a	b
E-VOL		O	C 0435	87-010-555-080	CAP,E 100-10 M 5L MA	a	b
E-VOL		O	C 0438	87-012-280-080	C-CAP,U 3300P-50 K B GRM	a	b
E-VOL		O	C 0439	87-012-280-080	C-CAP,U 3300P-50 K B GRM	a	b
E-VOL		O	C 0440	87-A11-070-080	C-CAP,U 0.033-16 K B	a	b
E-VOL		O	C 0441	87-010-380-040	CAP,E 47-16 M 11L SME	a	b
E-VOL		O	C 0442	87-012-188-080	C-CAP,U 47P-50 J CH GRM	a	b
E-VOL		O	C 0443	87-012-188-080	C-CAP,U 47P-50 J CH GRM	a	b
E-VOL		O	C 0444	87-A11-070-080	C-CAP,U 0.033-16 K B	a	b
E-VOL		O	C 0449	87-010-759-080	C-CAP,U 0.1-25 Z F CM/CB	a	b
E-VOL		O	C 0451	87-A10-707-080	C-CAP,U 0.47-10 Z F	a	b
E-VOL		O	C 0452	87-A10-707-080	C-CAP,U 0.47-10 Z F	a	b
E-VOL		O	C 0453	87-010-759-080	C-CAP,U 0.1-25 Z F CM/CB	a	b
E-VOL		O	C 0454	87-010-759-080	C-CAP,U 0.1-25 Z F CM/CB	a	b
E-VOL		S	D 0440	87-020-331-040	C-DIODE,DAN202K	a	b
E-VOL		S	D 0451	87-A40-250-040	C-DIODE,DAN217	a	b
						CDC-X527M YUSF	CDC-X527M YHSF
E-VOL		S	D 0905	87-017-366-040	C-DIODE,DAN202U	a	b
E-VOL		S	IC 0401	87-A22-225-030	C-IC,LA2657M	a	b
E-VOL		S	IC 0402	87-017-917-040	C-IC,BU4066BCF	a	b
E-VOL		O	J 0401	87-A61-224-110	JACK,PIN 4P XR-401	a	b
E-VOL		O	L 0401	87-003-143-080	COIL,4.7UH K LAL02	a	b
E-VOL		S	Q 0401	87-A30-287-040	C-TR,DTC114TKA	a	b
E-VOL		S	Q 0402	87-A30-287-040	C-TR,DTC114TKA	a	b
E-VOL		S	Q 0403	87-A30-287-040	C-TR,DTC114TKA	a	b
E-VOL		S	Q 0404	87-A30-287-040	C-TR,DTC114TKA	a	b
E-VOL		S	Q 0409	87-A30-405-040	C-TR,DTC114TUA	a	b
E-VOL		S	Q 0410	87-A30-405-040	C-TR,DTC114TUA	a	b
E-VOL		S	Q 0441	87-A30-287-040	C-TR,DTC114TKA	a	b
E-VOL		S	Q 0442	87-A30-282-040	C-TR,DTA114TKA	a	b
E-VOL		S	Q 0451	89-324-122-040	C-TR,2SC2412KR	a	b
E-VOL		O	R 0401	88-108-153-080	C-RES,U 15K-1/16W J	a	b
E-VOL		O	R 0402	88-108-153-080	C-RES,U 15K-1/16W J	a	b
E-VOL		X	R 0403	88-108-392-080	C-RES,U 3.9K-1/16W J	a	b
E-VOL		X	R 0404	88-108-392-080	C-RES,U 3.9K-1/16W J	a	b
E-VOL		O	R 0405	88-108-102-080	C-RES,U 1K-1/16W J	a	b
E-VOL		O	R 0406	88-108-102-080	C-RES,U 1K-1/16W J	a	b

ELECTRICAL PARTS LIST - 6/11

! = ⚠SAFTY PARTS
C = Components marked
All components used on this model at the production line are shown in this service manual.
However, please note that not all components will be available as spare parts for after-sales service.
Components marked S and O are designated as spare parts for service and will be stocked at the spare parts centers.
Components marked X and R are not designated as spare parts for after sales service, and will not be stocked at the spare parts centers.

UNIT-NAME	!	C	REF-NO	PARTS-NO	PARTS-NAME	SUFFIX&MODEL	
						CDC-X527M YUSF	CDC-X527M YHSF
E-VOL		O	R 0407	88-108-102-080	C-RES,U 1K-1/16W J	a	b
E-VOL		O	R 0408	88-108-102-080	C-RES,U 1K-1/16W J	a	b
E-VOL		X	R 0410	88-108-682-080	C-RES,U 6.8K-1/16W J	a	b
E-VOL		X	R 0411	88-108-682-080	C-RES,U 6.8K-1/16W J	a	b
E-VOL		O	R 0415	88-108-102-080	C-RES,U 1K-1/16W J	a	b
E-VOL		O	R 0416	88-108-102-080	C-RES,U 1K-1/16W J	a	b
E-VOL		O	R 0417	88-108-102-080	C-RES,U 1K-1/16W J	a	b
E-VOL		O	R 0418	88-108-102-080	C-RES,U 1K-1/16W J	a	b
E-VOL		X	R 0419	88-108-104-080	C-RES,U 100K-1/16W J	a	b
E-VOL		X	R 0420	88-108-104-080	C-RES,U 100K-1/16W J	a	b
E-VOL		X	R 0421	88-108-104-080	C-RES,U 100K-1/16W J	a	b
E-VOL		X	R 0422	88-108-104-080	C-RES,U 100K-1/16W J	a	b
E-VOL		X	R 0423	88-108-222-080	C-RES,U 2.2K-1/16W J	a	b
E-VOL		O	R 0424	88-108-272-080	C-RES,U 2.7K-1/16W J	a	b
E-VOL		X	R 0425	88-108-333-080	C-RES,U 33K-1/16W J	a	b
E-VOL		X	R 0426	88-108-333-080	C-RES,U 33K-1/16W J	a	b
E-VOL		O	R 0427	88-108-473-080	C-RES,U 47K-1/16W J	a	b
E-VOL		O	R 0428	88-108-473-080	C-RES,U 47K-1/16W J	a	b
E-VOL		X	R 0429	88-121-470-080	RES,47-1/8W J	a	b
E-VOL		X	R 0430	88-108-683-080	C-RES,U 68K-1/16W J	a	b
						CDC-X527M YUSF	CDC-X527M YHSF
E-VOL		X	R 0431	88-108-683-080	C-RES,U 68K-1/16W J	a	b
E-VOL		X	R 0432	88-108-683-080	C-RES,U 68K-1/16W J	a	b
E-VOL		X	R 0433	88-108-683-080	C-RES,U 68K-1/16W J	a	b
E-VOL		X	R 0434	88-108-393-080	C-RES,U 39K-1/16W J	a	b
E-VOL		O	R 0435	88-108-563-080	C-RES,U 56K-1/16W J	a	b
E-VOL		O	R 0436	88-108-563-080	C-RES,U 56K-1/16W J	a	b
E-VOL		X	R 0437	88-108-393-080	C-RES,U 39K-1/16W J	a	b
E-VOL		X	R 0438	88-108-274-080	C-RES,U 270K-1/16W J	a	b
E-VOL		O	R 0439	88-108-473-080	C-RES,U 47K-1/16W J	a	b
E-VOL		X	R 0441	88-121-222-080	RES,2.2K-1/8W J	a	b
E-VOL		O	R 0442	88-108-103-080	C-RES,U 10K-1/16W J	a	b
E-VOL		X	R 0451	88-108-104-080	C-RES,U 100K-1/16W J	a	b
E-VOL		X	R 0452	88-108-104-080	C-RES,U 100K-1/16W J	a	b
E-VOL		X	R 0453	88-108-105-080	C-RES,U 1M-1/16W J	a	b
E-VOL		O	R 0454	88-108-103-080	C-RES,U 10K-1/16W J	a	b
E-VOL		O	R 0456	88-108-102-080	C-RES,U 1K-1/16W J	a	b
E-VOL		X	R 0457	88-108-333-080	C-RES,U 33K-1/16W J	a	b
E-VOL		O	R 0458	88-108-224-080	C-RES,U 220K-1/16W J	a	b
MICON		O	C 0901	87-012-182-080	C-CAP,U 27P-50 J CH GRM	a	b
MICON		O	C 0902	87-012-179-080	C-CAP,U 20P-50 J CH GRM	a	b
						CDC-X527M YUSF	CDC-X527M YHSF
MICON		O	C 0903	87-010-555-080	CAP,E 100-10 M 5L MA	a	b
MICON		O	C 0904	87-016-039-090	CAP,DL 0.022F-5.5 Z 70 FM	a	b
MICON		O	C 0906	87-010-759-080	C-CAP,U 0.1-25 Z F CM/CB	a	b
MICON		O	C 0907	87-010-404-040	CAP,E 4.7-50 M 11L SME	a	b
MICON		O	C 0911	87-012-195-080	C-CAP,U 100P-50 J CH GRM	a	b
MICON		O	C 0912	87-012-195-080	C-CAP,U 100P-50 J CH GRM	a	b
MICON		O	C 0913	87-012-199-080	C-CAP,U 220P-50 J CH GRM	a	b
MICON		O	C 0941	87-010-759-080	C-CAP,U 0.1-25 Z F CM/CB	a	b
MICON		O	C 0942	87-010-759-080	C-CAP,U 0.1-25 Z F CM/CB	a	b
MICON		S	D 0901	87-020-331-040	C-DIODE,DAN202K	a	b
MICON		S	D 0902	87-020-331-040	C-DIODE,DAN202K	a	b
MICON		S	D 0903	87-020-331-040	C-DIODE,DAN202K	a	b
MICON		S	D 0904	87-070-136-080	ZENER,MTZJ5.1B	a	b
MICON		S	D 0906	87-020-331-040	C-DIODE,DAN202K	a	b
MICON		S	D 0907	87-020-331-040	C-DIODE,DAN202K	a	b
MICON		S	D 0912	87-020-465-080	DIODE,1SS133	a	b
MICON		S	D 0914	87-020-465-080	DIODE,1SS133	a	b
MICON		S	D 0915	87-020-465-080	DIODE,1SS133	a	b
MICON		S	D 0916	87-020-465-080	DIODE,1SS133	a	b
MICON		S	D 0941	87-070-136-080	ZENER,MTZJ5.1B	a	b
						CDC-X527M YUSF	CDC-X527M YHSF
MICON		S	IC 0901	8C-KCF-611-030	C-IC,LC72366-9A69	a	b
MICON		S	IC 0941	88-KT1-606-080	IC,PST994D	a	b
MICON		O	L 0901	87-003-149-080	COIL,47UH J LAL02	a	b
MICON		O	R 0902	88-108-823-080	C-RES,U 82K-1/16W J	a	b
MICON		O	R 0903	88-108-473-080	C-RES,U 47K-1/16W J	a	b
MICON		X	R 0904	88-108-474-080	C-RES,U 470K-1/16W J	a	b
MICON		X	R 0905	88-108-104-080	C-RES,U 100K-1/16W J	a	b
MICON		X	R 0906	88-108-222-080	C-RES,U 2.2K-1/16W J	a	b
MICON		O	R 0908	88-108-224-080	C-RES,U 220K-1/16W J	a	b
MICON		X	R 0909	88-121-104-080	RES,100K-1/8W J	a	b
MICON		X	R 0910	88-108-104-080	C-RES,U 100K-1/16W J	a	b
MICON		O	R 0911	88-108-223-080	C-RES,U 22K-1/16W J	a	b
MICON		X	R 0912	88-108-222-080	C-RES,U 2.2K-1/16W J	a	b
MICON		O	R 0913	88-108-223-080	C-RES,U 22K-1/16W J	a	b
MICON		X	R 0914	88-121-104-080	RES,100K-1/8W J	a	b
MICON		X	R 0915	88-108-104-080	C-RES,U 100K-1/16W J	a	b
MICON		X	R 0916	88-108-104-080	C-RES,U 100K-1/16W J	a	b
MICON		X	R 0918	88-108-104-080	C-RES,U 100K-1/16W J	a	b
MICON		O	R 0921	88-108-102-080	C-RES,U 1K-1/16W J	a	b
MICON		X	R 0922	88-108-104-080	C-RES,U 100K-1/16W J	a	b

ELECTRICAL PARTS LIST - 7/11

! = ⚠SAFTY PARTS
C = Components marked
All components used on this model at the production line are shown in this service manual.
However, please note that not all components will be available as spare parts for after-sales service.
Components marked S and O are designated as spare parts for service and will be stocked at the spare parts centers.
Components marked X and R are not designated as spare parts for after sales service, and will not be stocked at the spare parts centers.

UNIT-NAME	!	C	REF-NO	PARTS-NO	PARTS-NAME	SUFFIX&MODEL	
						CDC-X527M YUSF	CDC-X527M YHSF
MICON		X	R 0923	88-108-104-080	C-RES,U 100K-1/16W J	a	b
MICON		X	R 0924	88-108-104-080	C-RES,U 100K-1/16W J	a	b
MICON		X	R 0925	88-108-104-080	C-RES,U 100K-1/16W J	a	b
MICON		X	R 0926	88-121-102-080	RES,1K-1/8W J	a	b
MICON		O	R 0927	88-108-332-080	C-RES,U 3.3K-1/16W J	a	b
MICON		X	R 0928	88-121-332-080	RES,3.3K-1/8W J	a	b
MICON		O	R 0929	88-108-102-080	C-RES,U 1K-1/16W J	a	b
MICON		X	R 0933	88-121-102-080	RES,1K-1/8W J	a	b
MICON		X	R 0934	88-121-102-080	RES,1K-1/8W J	a	b
MICON		X	R 0935	88-121-102-080	RES,1K-1/8W J	a	b
MICON		X	R 0936	88-121-102-080	RES,1K-1/8W J	a	b
MICON		X	R 0941	88-108-392-080	C-RES,U 3.9K-1/16W J	a	b
MICON		O	R 0942	88-108-103-080	C-RES,U 10K-1/16W J	a	b
MICON		X	R 0943	88-108-472-080	C-RES,U 4.7K-1/16W J	a	b
MICON		X	R 0952	88-108-000-080	C-JUMPER,U	a	b
MICON		O	SW 0901	87-A91-070-010	SW,TACT SKHHLV	a	b
MICON		O	X 0901	87-A70-362-080	VIB,XTAL 4.5MHZ HC-49/U-S	a	b
POWER AMP		O	C 0501	87-012-199-080	C-CAP,U 220P-50 J CH GRM	a	b
POWER AMP		O	C 0502	87-012-199-080	C-CAP,U 220P-50 J CH GRM	a	b
POWER AMP		O	C 0503	87-012-199-080	C-CAP,U 220P-50 J CH GRM	a	b
						CDC-X527M YUSF	CDC-X527M YHSF
POWER AMP		O	C 0504	87-012-199-080	C-CAP,U 220P-50 J CH GRM	a	b
POWER AMP		O	C 0505	87-010-805-080	C-CAP,S 1-16 Z F GRM	a	b
POWER AMP		O	C 0506	87-010-805-080	C-CAP,S 1-16 Z F GRM	a	b
POWER AMP		O	C 0507	87-010-805-080	C-CAP,S 1-16 Z F GRM	a	b
POWER AMP		O	C 0508	87-010-805-080	C-CAP,S 1-16 Z F GRM	a	b
POWER AMP		O	C 0509	87-010-380-040	CAP,E 47-16 M 11L SME	a	b
POWER AMP		O	C 0510	87-010-805-080	C-CAP,S 1-16 Z F GRM	a	b
POWER AMP		O	C 0511	8A-KC7-623-000	CAP,E 2200-16 125 BT	a	b
POWER AMP		O	C 0512	87-010-759-080	C-CAP,U 0.1-25 Z F CM/CB	a	b
POWER AMP		O	C 0513	87-010-759-080	C-CAP,U 0.1-25 Z F CM/CB	a	b
POWER AMP		O	C 0514	87-A12-317-080	C-CAP,U 0.1-50 Z F	a	b
POWER AMP		O	C 0515	87-010-498-040	CAP,E 10-16 M 5L SRE	a	b
POWER AMP		O	C 0516	87-012-274-080	C-CAP,U 1000P-50 K B GRM	a	b
POWER AMP		S	D 0501	87-001-783-080	DIODE,1N4002	a	b
POWER AMP		S	D 0502	87-001-783-080	DIODE,1N4002	a	b
POWER AMP		S	D 0503	87-001-783-080	DIODE,1N4002	a	b
POWER AMP		S	D 0504	87-001-783-080	DIODE,1N4002	a	b
POWER AMP		S	D 0505	87-001-783-080	DIODE,1N4002	a	b
POWER AMP		S	D 0506	87-001-783-080	DIODE,1N4002	a	b
POWER AMP		S	D 0507	87-001-783-080	DIODE,1N4002	a	b
						CDC-X527M YUSF	CDC-X527M YHSF
POWER AMP		S	D 0508	87-001-783-080	DIODE,1N4002	a	b
POWER AMP		S	D 0591	87-A40-337-080	ZENER,MTZJ6.8B	a	b
POWER AMP		S	IC 0501	8B-KCF-616-010	IC,TA8273H	a	b
POWER AMP		S	Q 0591	87-A30-282-040	C-TR,DTA114TKA	a	b
POWER AMP		S	Q 0592	87-A30-282-040	C-TR,DTA114TKA	a	b
POWER AMP		O	R 0501	88-108-123-080	C-RES,U 12K-1/16W J	a	b
POWER AMP		O	R 0502	88-108-123-080	C-RES,U 12K-1/16W J	a	b
POWER AMP		O	R 0503	88-108-123-080	C-RES,U 12K-1/16W J	a	b
POWER AMP		O	R 0504	88-108-123-080	C-RES,U 12K-1/16W J	a	b
POWER AMP		X	R 0505	88-108-183-080	C-RES,U 18K-1/16W J	a	b
POWER AMP		X	R 0506	88-108-183-080	C-RES,U 18K-1/16W J	a	b
POWER AMP		X	R 0507	88-108-183-080	C-RES,U 18K-1/16W J	a	b
POWER AMP		X	R 0508	88-108-183-080	C-RES,U 18K-1/16W J	a	b
POWER AMP		X	R 0509	88-121-103-080	RES,10K-1/8W J	a	b
POWER AMP		O	R 0592	88-108-473-080	C-RES,U 47K-1/16W J	a	b
POWER SUPPLY		O	C 0801	87-012-278-080	C-CAP,U 2200P-50 K B GRM	a	b
POWER SUPPLY		O	C 0804	87-012-278-080	C-CAP,U 2200P-50 K B GRM	a	b
POWER SUPPLY		O	C 0811	87-010-787-080	C-CAP,U 0.022-25 K B GRM	a	b
POWER SUPPLY		O	C 0812	87-010-498-040	CAP,E 10-16 M 5L SRE	a	b
POWER SUPPLY		O	C 0813	87-010-555-040	CAP,E 100-10 M 5L SRE	a	b
						CDC-X527M YUSF	CDC-X527M YHSF
POWER SUPPLY		O	C 0814	87-010-787-080	C-CAP,U 0.022-25 K B GRM	a	b
POWER SUPPLY		O	C 0821	87-010-787-080	C-CAP,U 0.022-25 K B GRM	a	b
POWER SUPPLY		O	C 0822	87-010-380-040	CAP,E 47-16 M 11L SME	a	b
POWER SUPPLY		O	C 0831	87-010-380-040	CAP,E 47-16 M 11L SME	a	b
POWER SUPPLY		O	C 0833	87-010-759-080	C-CAP,U 0.1-25 Z F CM/CB	a	b
POWER SUPPLY		O	CON0801	8Z-KT1-624-010	CONN,16P SOC017	a	b
POWER SUPPLY		S	D 0811	87-001-783-080	DIODE,1N4002	a	b
POWER SUPPLY		S	D 0812	87-001-783-080	DIODE,1N4002	a	b
POWER SUPPLY		S	D 0813	87-017-932-080	ZENER,MTZJ6.2B	a	b
POWER SUPPLY		S	D 0821	87-070-334-080	ZENER,MTZJ10B	a	b
POWER SUPPLY		S	D 0831	87-070-335-080	ZENER,MTZJ8.2B	a	b
POWER SUPPLY		S	D 0881	87-A40-798-010	DIODE,1N5402 (3A/200V)	a	b
POWER SUPPLY		S	D 0883	87-020-465-080	DIODE,1SS133	a	b
POWER SUPPLY		S	F 0881	8B-KC1-621-010	FUSE,15A 32V	a	b
POWER SUPPLY		O	L 0801	8B-KCF-615-010	FLTR,AMORPHOUS -CHOKE	a	b
POWER SUPPLY		S	Q 0801	89-213-750-010	TR,2SB1375	a	b
POWER SUPPLY		S	Q 0802	87-A30-287-040	C-TR,DTC114TKA	a	b
POWER SUPPLY		S	Q 0811	87-A30-301-080	TR,2SD1862	a	b
POWER SUPPLY		S	Q 0821	89-420-120-010	TR,2SD2012	a	b
POWER SUPPLY		S	Q 0831	89-420-120-010	TR,2SD2012	a	b

ELECTRICAL PARTS LIST - 8/11

! = ⚠SAFTY PARTS
C = Components marked
All components used on this model at the production line are shown in this service manual.
However, please note that not all components will be available as spare parts for after-sales service.
Components marked S and O are designated as spare parts for service and will be stocked at the spare parts centers.
Components marked X and R are not designated as spare parts for after sales service, and will not be stocked at the spare parts centers.

UNIT-NAME	!	C	REF-NO	PARTS-NO	PARTS-NAME	SUFFIX&MODEL	
						CDC-X527M YUSF	CDC-X527M YHSF
POWER SUPPLY	S	Q	0832	87-A30-289-040	C-TR,2SA1037AK(Q)	a	b
POWER SUPPLY	S	Q	0833	87-A30-427-040	C-TR,DTC114EKA	a	b
POWER SUPPLY	O	R	0801	88-108-103-080	C-RES,U 10K-1/16W J	a	b
POWER SUPPLY	O	R	0802	88-148-102-080	C-RES, 1K-1/2W J	a	b
POWER SUPPLY	X	R	0803	88-148-229-080	C-RES, 2.2-1/2W J	a	b
POWER SUPPLY	X	R	0811	88-118-101-080	C-RES,S 100-1/10W J	a	b
POWER SUPPLY	X	R	0812	88-108-472-080	C-RES,U 4.7K-1/16W J	a	b
POWER SUPPLY	X	R	0813	88-118-101-080	C-RES,S 100-1/10W J	a	b
POWER SUPPLY	X	R	0821	88-118-391-080	C-RES,S 390-1/10W J	a	b
POWER SUPPLY	X	R	0822	88-118-391-080	C-RES,S 390-1/10W J	a	b
POWER SUPPLY	X	R	0831	88-148-151-080	C-RES, 150-1/2W J	a	b
POWER SUPPLY	O	R	0833	88-108-103-080	C-RES,U 10K-1/16W J	a	b
POWER SUPPLY	X	R	0834	88-118-102-080	C-RES,S 1K-1/10W J	a	b
TUNER	X	*		8Z-KC1-614-010	WIRE,ANT	a	b
TUNER	O	C	0101	87-012-274-080	C-CAP,U 1000P-50 K B GRM	a	b
TUNER	O	C	0102	87-012-286-080	C-CAP,U 0.01-25 K B GRM	a	b
TUNER	O	C	0103	87-010-402-040	CAP,E 2.2-50 M 11L SME	a	b
TUNER	O	C	0106	87-012-282-080	C-CAP,U 4700P-50 K B GRM	a	b
TUNER	O	C	0107	87-010-379-040	CAP,E 22-16 M 11L SME	a	b
TUNER	O	C	0108	87-012-196-080	C-CAP,U 120P-50 J CH GRM	a	b
						CDC-X527M YUSF	CDC-X527M YHSF
TUNER	O	C	0109	87-010-380-040	CAP,E 47-16 M 11L SME	a	b
TUNER	O	C	0110	87-010-787-080	C-CAP,U 0.022-25 K B GRM	a	b
TUNER	O	C	0112	87-012-281-080	C-CAP,U 3900P-50 K B GRM	a	b
TUNER	O	C	0113	87-012-286-080	C-CAP,U 0.01-25 K B GRM	a	b
TUNER	O	C	0114	87-010-759-080	C-CAP,U 0.1-25 Z F CM/CB	a	b
TUNER	O	C	0115	87-010-759-080	C-CAP,U 0.1-25 Z F CM/CB	a	b
TUNER	O	C	0116	87-010-759-080	C-CAP,U 0.1-25 Z F CM/CB	a	b
TUNER	O	C	0131	87-A11-228-080	C-CAP,U 0.027-25 K B	a	b
TUNER	O	C	0132	87-A11-228-080	C-CAP,U 0.027-25 K B	a	b
TUNER	O	C	0133	87-A10-707-080	C-CAP,U 0.47-10 Z F	a	b
TUNER	O	C	0134	87-A10-707-080	C-CAP,U 0.47-10 Z F	a	b
TUNER	O	C	0140	87-012-282-080	C-CAP,U 4700P-50 K B GRM	a	b
TUNER	O	C	0176	87-012-286-080	C-CAP,U 0.01-25 K B GRM	a	b
TUNER	S	D	0101	87-A40-250-040	C-DIODE,DAN217	a	b
TUNER	O	J	0101	8Z-KT1-614-010	ANT,AW-002	a	b
TUNER	O	L	0101	87-003-143-080	COIL,4.7UH K LAL02	a	b
TUNER	O	L	0102	8Z-KT1-619-010	COIL,68MH K7-D	a	b
TUNER	S	Q	0101	89-324-122-040	C-TR,2SC2412KR	a	b
TUNER	S	Q	0102	89-324-122-040	C-TR,2SC2412KR	a	b
TUNER	S	Q	0105	87-A30-289-040	C-TR,2SA1037AK(Q)	a	b
						CDC-X527M YUSF	CDC-X527M YHSF
TUNER	S	Q	0106	89-324-122-040	C-TR,2SC2412KR	a	b
TUNER	S	Q	0107	87-A30-288-040	C-TR,DTC114YKA	a	b
TUNER	S	Q	0109	87-A30-287-040	C-TR,DTC114TKA	a	b
TUNER	X	R	0101	88-108-105-080	C-RES,U 1M-1/16W J	a	b
TUNER	X	R	0102	88-108-821-080	C-RES,U 820-1/16W J	a	b
TUNER	O	R	0103	88-108-102-080	C-RES,U 1K-1/16W J	a	b
TUNER	O	R	0104	88-108-102-080	C-RES,U 1K-1/16W J	a	b
TUNER	O	R	0105	88-108-103-080	C-RES,U 10K-1/16W J	a	b
TUNER	O	R	0106	88-108-223-080	C-RES,U 22K-1/16W J	a	b
TUNER	O	R	0110	88-108-103-080	C-RES,U 10K-1/16W J	a	b
TUNER	X	R	0111	88-108-222-080	C-RES,U 2.2K-1/16W J	a	b
TUNER	X	R	0112	88-108-330-080	C-RES,U 33-1/16W J	a	b
TUNER	X	R	0113	88-108-221-080	C-RES,U 220-1/16W J	a	b
TUNER	X	R	0114	88-108-000-080	C-JUMPER,U	a	b
TUNER	X	R	0115	88-118-100-080	C-RES,S 10-1/10W J	a	b
TUNER	O	R	0116	88-108-473-080	C-RES,U 47K-1/16W J	a	b
TUNER	X	R	0117	88-108-334-080	C-RES,U 330K-1/16W J	a	b
TUNER	X	R	0118	88-108-104-080	C-RES,U 100K-1/16W J	a	b
TUNER	O	R	0119	88-108-102-080	C-RES,U 1K-1/16W J	a	b
TUNER	X	R	0120	88-108-122-080	C-RES,U 1.2K-1/16W J	a	b
						CDC-X527M YUSF	CDC-X527M YHSF
TUNER	O	R	0121	88-108-102-080	C-RES,U 1K-1/16W J	a	b
TUNER	X	R	0131	88-121-393-080	RES,39K-1/8W J	a	b
TUNER	X	R	0132	88-121-393-080	RES,39K-1/8W J	a	b
TUNER	X	R	0133	88-108-000-080	C-JUMPER,U	a	b
TUNER	O	R	0140	88-108-102-080	C-RES,U 1K-1/16W J	a	b
TUNER	O	TU	0101	8C-KCG-621-010	TU UNIT, FAE347-A30	a	b

ELECTRICAL PARTS LIST - 9/11 (CZA-4 SNYNF) -1/3

! = ⚠SAFTY PARTS
C = Components marked
All components used on this model at the production line are shown in this service manual.
However, please note that not all components will be available as spare parts for after-sales service.
Components marked S and O are designated as spare parts for service and will be stocked at the spare parts centers.
Components marked X and R are not designated as spare parts for after sales service, and will not be stocked at the spare parts centers.

UNIT-NAME	!	C	REF-NO	PARTS-NO	PARTS-NAME	SUFFIX&MODEL
						CZA-4 SNYNF
CD		O	C 0201	87-010-553-040	CAP,E 47-16 M 5L SRE	a
CD		O	C 0202	87-010-553-040	CAP,E 47-16 M 5L SRE	a
CD		O	C 0203	87-012-274-080	C-CAP,U 1000P-50 K B	a
CD		O	C 0204	87-A10-260-080	C-CAP,U 0.1-16 K B	a
CD		O	C 0205	87-A10-353-080	C-CAP,U 0.22-10 K B	a
CD		O	C 0206	87-010-492-040	CAP,E 0.33-50 M 5L SRE	a
CD		O	C 0207	87-010-956-080	C-CAP,S 0.068-25 K B GRM	a
CD		O	C 0208	87-012-272-080	C-CAP,U 680P-50 K B GRM	a
CD		O	C 0209	87-A10-504-080	C-CAP,U 0.047-16 K B	a
CD		O	C 0210	87-A10-260-080	C-CAP,U 0.1-16 K B	a
CD		O	C 0211	87-010-498-040	CAP,E 10-16 M 5L SRE	a
CD		O	C 0212	87-012-276-080	C-CAP,U 1500P-50 K B	a
CD		O	C 0213	87-A10-504-080	C-CAP,U 0.047-16 K B	a
CD		O	C 0214	87-A10-260-080	C-CAP,U 0.1-16 K B	a
CD		O	C 0215	87-012-278-080	C-CAP,U 2200P-50 K B	a
CD		O	C 0216	87-A10-353-080	C-CAP,U 0.22-10 K B	a
CD		O	C 0217	87-A10-260-080	C-CAP,U 0.1-16 K B	a
CD		O	C 0218	87-010-787-080	C-CAP,U 0.022-25 K B	a
CD		O	C 0219	87-012-268-080	C-CAP,U 330P-50 K B GRM	a
CD		O	C 0220	87-012-280-080	C-CAP,U 3300P-50 K B	a
						CZA-4 SNYNF
CD		O	C 0221	87-012-195-080	C-CAP,U 100P-50 J CH	a
CD		O	C 0222	87-010-492-040	CAP,E 0.33-50 M 5L SRE	a
CD		O	C 0223	87-010-067-040	CAP,E 0.1-50 M 5L SRE	a
CD		O	C 0224	87-010-553-040	CAP,E 47-16 M 5L SRE	a
CD		O	C 0225	87-012-280-080	C-CAP,U 3300P-50 K B	a
CD		O	C 0226	87-010-497-040	CAP,E 4.7-35 M 5L SRE	a
CD		O	C 0227	87-010-555-040	CAP,E 100-10 M 5L SRE	a
CD		O	C 0228	87-A10-260-080	C-CAP,U 0.1-16 K B	a
CD		O	C 0229	87-010-498-040	CAP,E 10-16 M 5L SRE	a
CD		O	C 0230	87-A10-260-080	C-CAP,U 0.1-16 K B	a
CD		O	C 0231	87-010-555-040	CAP,E 100-10 M 5L SRE	a
CD		O	C 0232	87-A10-260-080	C-CAP,U 0.1-16 K B	a
CD		O	C 0233	87-010-555-040	CAP,E 100-10 M 5L SRE	a
CD		O	C 0234	87-010-828-080	C-CAP,U 0.033-16 Z F	a
CD		O	C 0235	87-A10-504-080	C-CAP,U 0.047-16 K B	a
CD		O	C 0236	87-010-067-040	CAP,E 0.1-50 M 5L SRE	a
CD		O	C 0237	87-010-553-040	CAP,E 47-16 M 5L SRE	a
CD		O	C 0238	87-012-286-080	C-CAP,U 0.01-25 K B	a
CD		O	C 0240	87-A10-260-080	C-CAP,U 0.1-16 K B	a
CD		O	C 0250	87-A10-260-080	C-CAP,U 0.1-16 K B	a
						CZA-4 SNYNF
CD		O	C 0251	87-010-555-040	CAP,E 100-10 M 5L SRE	a
CD		O	C 0252	87-A10-260-080	C-CAP,U 0.1-16 K B	a
CD		O	C 0253	87-A10-260-080	C-CAP,U 0.1-16 K B	a
CD		O	C 0254	87-A10-260-080	C-CAP,U 0.1-16 K B	a
CD		O	C 0256	87-012-282-080	C-CAP,U 4700P-50 K B	a
CD		O	C 0258	87-012-168-080	C-CAP,U 6P-50 D CH	a
CD		O	C 0259	87-012-184-080	C-CAP,U 33P-50 J CH	a
CD		O	C 0261	87-012-199-080	C-CAP,U 220P-50 J CH	a
CD		O	C 0262	87-A10-260-080	C-CAP,U 0.1-16 K B	a
CD		O	C 0263	87-010-555-040	CAP,E 100-10 M 5L SRE	a
CD		O	C 0264	87-010-555-040	CAP,E 100-10 M 5L SRE	a
CD		O	C 0265	87-A10-260-080	C-CAP,U 0.1-16 K B	a
CD		O	C 0266	87-A10-260-080	C-CAP,U 0.1-16 K B	a
CD		O	C 0267	87-010-498-040	CAP,E 10-16 M 5L SRE	a
CD		O	C 0268	87-010-498-040	CAP,E 10-16 M 5L SRE	a
CD		O	C 0269	87-012-276-080	C-CAP,U 1500P-50 K B	a
CD		O	C 0270	87-012-276-080	C-CAP,U 1500P-50 K B	a
CD		O	C 0280	87-A10-189-040	CAP,E 220-10 M 5L	a
CD		O	C 0281	87-010-555-040	CAP,E 100-10 M 5L SRE	a
CD		O	C 0282	87-A10-260-080	C-CAP,U 0.1-16 K B	a
						CZA-4 SNYNF
CD		O	CON0201	87-A61-220-080	C-CONN,20P H 52271-2090	a
CD		S	IC 0201	87-A20-446-010	C-IC,LA9241ML	a
CD		S	IC 0202	87-A21-319-010	C-IC,LC78622NE	a
CD		S	IC 0203	87-A22-080-040	C-IC,LA6557H	a
CD		X	JR 0101	88-108-000-080	C-JUMPER,U	a
CD		S	Q 0201	87-A30-289-040	C-TR,2SA1037AK(Q)	a
CD		S	Q 0202	87-A30-435-040	C-TR,DTC144EKA	a
CD		S	Q 0203	87-A30-435-040	C-TR,DTC144EKA	a
CD		S	Q 0204	87-A30-435-040	C-TR,DTC144EKA	a
CD		S	Q 0205	87-A30-435-040	C-TR,DTC144EKA	a
CD		S	Q 0206	89-324-122-040	C-TR,2SC2412KR	a
CD		S	Q 0207	87-A30-299-080	TR,2SB1326	a
CD		S	Q 0208	87-A30-287-040	C-TR,DTC114TKA	a
CD		X	R 0201	88-108-100-080	C-RES,U 10-1/16W J	a
CD		X	R 0202	88-108-103-080	C-RES,U 10K-1/16W J	a
CD		X	R 0203	88-108-183-080	C-RES,U 18K-1/16W J	a
CD		X	R 0204	88-108-153-080	C-RES,U 15K-1/16W J	a
CD		X	R 0205	88-108-153-080	C-RES,U 15K-1/16W J	a
CD		X	R 0206	88-108-183-080	C-RES,U 18K-1/16W J	a
CD		X	R 0207	88-108-153-080	C-RES,U 15K-1/16W J	a

ELECTRICAL PARTS LIST - 10/11 (CZA-4 SNYNF) -2/3

! = ⚠SAFTY PARTS
C = Components marked
All components used on this model at the production line are shown in this service manual.
However, please note that not all components will be available as spare parts for after-sales service.
Components marked S and O are designated as spare parts for service and will be stocked at the spare parts centers.
Components marked X and R are not designated as spare parts for after sales service, and will not be stocked at the spare parts centers.

UNIT-NAME	!	C	REF-NO	PARTS-NO	PARTS-NAME	SUFFIX&MODEL
						CZA-4 SNYNF
CD		X	R 0208	88-108-153-080	C-RES,U 15K-1/16W J	a
CD		X	R 0209	88-108-392-080	C-RES,U 3.9K-1/16W J	a
CD		X	R 0210	88-108-392-080	C-RES,U 3.9K-1/16W J	a
CD		X	R 0211	88-108-102-080	C-RES,U 1K-1/16W J	a
CD		X	R 0212	88-108-102-080	C-RES,U 1K-1/16W J	a
CD		X	R 0213	88-108-682-080	C-RES,U 6.8K-1/16W J	a
CD		X	R 0214	88-108-682-080	C-RES,U 6.8K-1/16W J	a
CD		X	R 0215	88-108-103-080	C-RES,U 10K-1/16W J	a
CD		X	R 0216	88-108-103-080	C-RES,U 10K-1/16W J	a
CD		X	R 0217	88-108-104-080	C-RES,U 100K-1/16W J	a
CD		X	R 0218	88-108-682-080	C-RES,U 6.8K-1/16W J	a
CD		X	R 0219	88-108-182-080	C-RES,U 1.8K-1/16W J	a
CD		X	R 0220	88-108-683-080	C-RES,U 68K-1/16W J	a
CD		X	R 0221	88-108-123-080	C-RES,U 12K-1/16W J	a
CD		X	R 0222	88-108-103-080	C-RES,U 10K-1/16W J	a
CD		X	R 0223	88-108-154-080	C-RES,U 150K-1/16W J	a
CD		X	R 0224	88-108-153-080	C-RES,U 15K-1/16W J	a
CD		X	R 0225	88-108-392-080	C-RES,U 3.9K-1/16W J	a
CD		X	R 0226	88-108-153-080	C-RES,U 15K-1/16W J	a
CD		X	R 0227	88-108-331-080	C-RES,U 330-1/16W J	a
						CZA-4 SNYNF
CD		X	R 0228	88-108-224-080	C-RES,U 220K-1/16W J	a
CD		X	R 0229	88-108-183-080	C-RES,U 18K-1/16W J	a
CD		X	R 0230	88-108-562-080	C-RES,U 5.6K-1/16W J	a
CD		X	R 0231	88-108-183-080	C-RES,U 18K-1/16W J	a
CD		X	R 0232	88-108-563-080	C-RES,U 56K-1/16W J	a
CD		X	R 0233	88-108-152-080	C-RES,U 1.5K-1/16W J	a
CD		X	R 0234	88-108-473-080	C-RES,U 47K-1/16W J	a
CD		X	R 0235	88-108-124-080	C-RES,U 120K-1/16W J	a
CD		X	R 0236	88-108-333-080	C-RES,U 33K-1/16W J	a
CD		X	R 0237	88-108-473-080	C-RES,U 47K-1/16W J	a
CD		X	R 0238	88-108-473-080	C-RES,U 47K-1/16W J	a
CD		X	R 0239	88-108-153-080	C-RES,U 15K-1/16W J	a
CD		X	R 0240	88-108-122-080	C-RES,U 1.2K-1/16W J	a
CD		O	R 0241	87-022-292-080	C-RES,U 330K-1/16W F	a
CD		O	R 0242	87-022-292-080	C-RES,U 330K-1/16W F	a
CD		X	R 0243	88-108-563-080	C-RES,U 56K-1/16W J	a
CD		X	R 0244	88-108-223-080	C-RES,U 22K-1/16W J	a
CD		X	R 0245	88-108-473-080	C-RES,U 47K-1/16W J	a
CD		X	R 0246	88-108-100-080	C-RES,U 10-1/16W J	a
CD		X	R 0247	88-108-109-080	C-RES,U 1-1/16W J	a
						CZA-4 SNYNF
CD		X	R 0248	88-108-184-080	C-RES,U 180K-1/16W J	a
CD		X	R 0250	88-108-681-080	C-RES,U 680-1/16W J	a
CD		X	R 0251	88-108-333-080	C-RES,U 33K-1/16W J	a
CD		X	R 0252	88-108-122-080	C-RES,U 1.2K-1/16W J	a
CD		X	R 0253	88-108-333-080	C-RES,U 33K-1/16W J	a
CD		X	R 0254	88-108-000-080	C-JUMPER,U	a
CD		X	R 0255	88-108-471-080	C-RES,U 470-1/16W J	a
CD		X	R 0256	88-108-563-080	C-RES,U 56K-1/16W J	a
CD		X	R 0257	88-108-103-080	C-RES,U 10K-1/16W J	a
CD		X	R 0258	88-108-822-080	C-RES,U 8.2K-1/16W J	a
CD		X	R 0259	88-108-820-080	C-RES,U 82-1/16W J	a
CD		X	R 0260	88-108-470-080	C-RES,U 47-1/16W J	a
CD		X	R 0261	88-108-222-080	C-RES,U 2.2K-1/16W J	a
CD		X	R 0262	88-108-222-080	C-RES,U 2.2K-1/16W J	a
CD		X	R 0263	88-108-332-080	C-RES,U 3.3K-1/16W J	a
CD		X	R 0264	88-108-332-080	C-RES,U 3.3K-1/16W J	a
CD		X	R 0265	88-108-102-080	C-RES,U 1K-1/16W J	a
CD		X	R 0266	88-108-109-080	C-RES,U 1-1/16W J	a
CD		X	R 0267	88-108-109-080	C-RES,U 1-1/16W J	a
CD		X	R 0268	88-108-820-080	C-RES,U 82-1/16W J	a
						CZA-4 SNYNF
CD		X	R 0269	88-108-223-080	C-RES,U 22K-1/16W J	a
CD		X	R 0270	88-108-333-080	C-RES,U 33K-1/16W J	a
CD		X	R 0271	88-108-393-080	C-RES,U 39K-1/16W J	a
CD		X	R 0272	88-108-154-080	C-RES,U 150K-1/16W J	a
CD		X	R 0273	88-108-000-080	C-JUMPER,U	a
CD		X	R 0274	88-108-103-080	C-RES,U 10K-1/16W J	a
CD		X	R 0275	88-108-000-080	C-JUMPER,U	a
CD		X	R 0276	88-108-000-080	C-JUMPER,U	a
CD		X	R 0277	88-108-822-080	C-RES,U 8.2K-1/16W J	a
CD		X	R 0278	88-108-561-080	C-RES,U 560-1/16W J	a
CD		X	R 0281	88-108-155-080	C-RES,U 1.5M-1/16W J	a
CD		X	R 0282	88-108-155-080	C-RES,U 1.5M-1/16W J	a
CD		X	R 0283	88-108-154-080	C-RES,U 150K-1/16W J	a
CD		X	R 0284	88-108-223-080	C-RES,U 22K-1/16W J	a
CD		X	R 0285	88-108-123-080	C-RES,U 12K-1/16W J	a
CD		X	R 0286	88-108-154-080	C-RES,U 150K-1/16W J	a
CD		X	R 0288	88-108-152-080	C-RES,U 1.5K-1/16W J	a
CD		X	R 0291	88-108-101-080	C-RES,U 100-1/16W J	a
CD		X	R 0295	88-108-222-080	C-RES,U 2.2K-1/16W J	a
CD		X	R 0296	88-108-222-080	C-RES,U 2.2K-1/16W J	a

ELECTRICAL PARTS LIST - 11/11 (CZA-4 SNYNF) -3/3

! = ⚠SAFTY PARTS
C = Components marked
All components used on this model at the production line are shown in this service manual.
However, please note that not all components will be available as spare parts for after-sales service.
Components marked S and O are designated as spare parts for service and will be stocked at the spare parts centers.
Components marked X and R are not designated as spare parts for after sales service, and will not be stocked at the spare parts centers.

UNIT-NAME	!	C	REF-NO	PARTS-NO	PARTS-NAME	SUFFIX&MODEL
						CZA-4 SNYNF
CD		X	R 0297	88-108-102-080	C-RES,U 1K-1/16W J	a
CD		O	X 0201	87-A70-371-080	VIB,CER 16.934MHZ CSTLS16M9X54	a

SCHEMATIC DIAGRAM-1/3(MAIN)

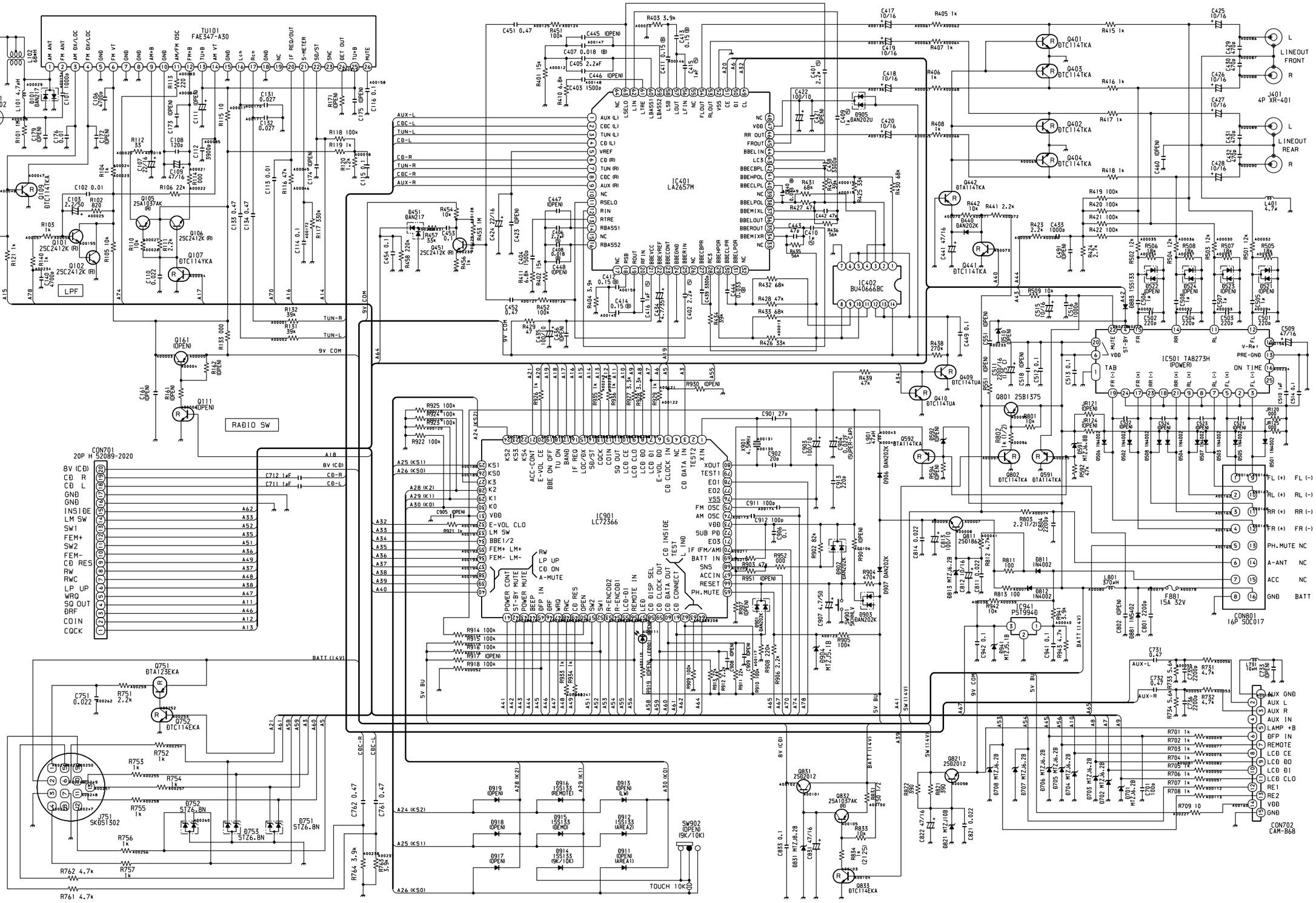

SCHEMATICDIAGRAM-2/3(FRONT/AUX)

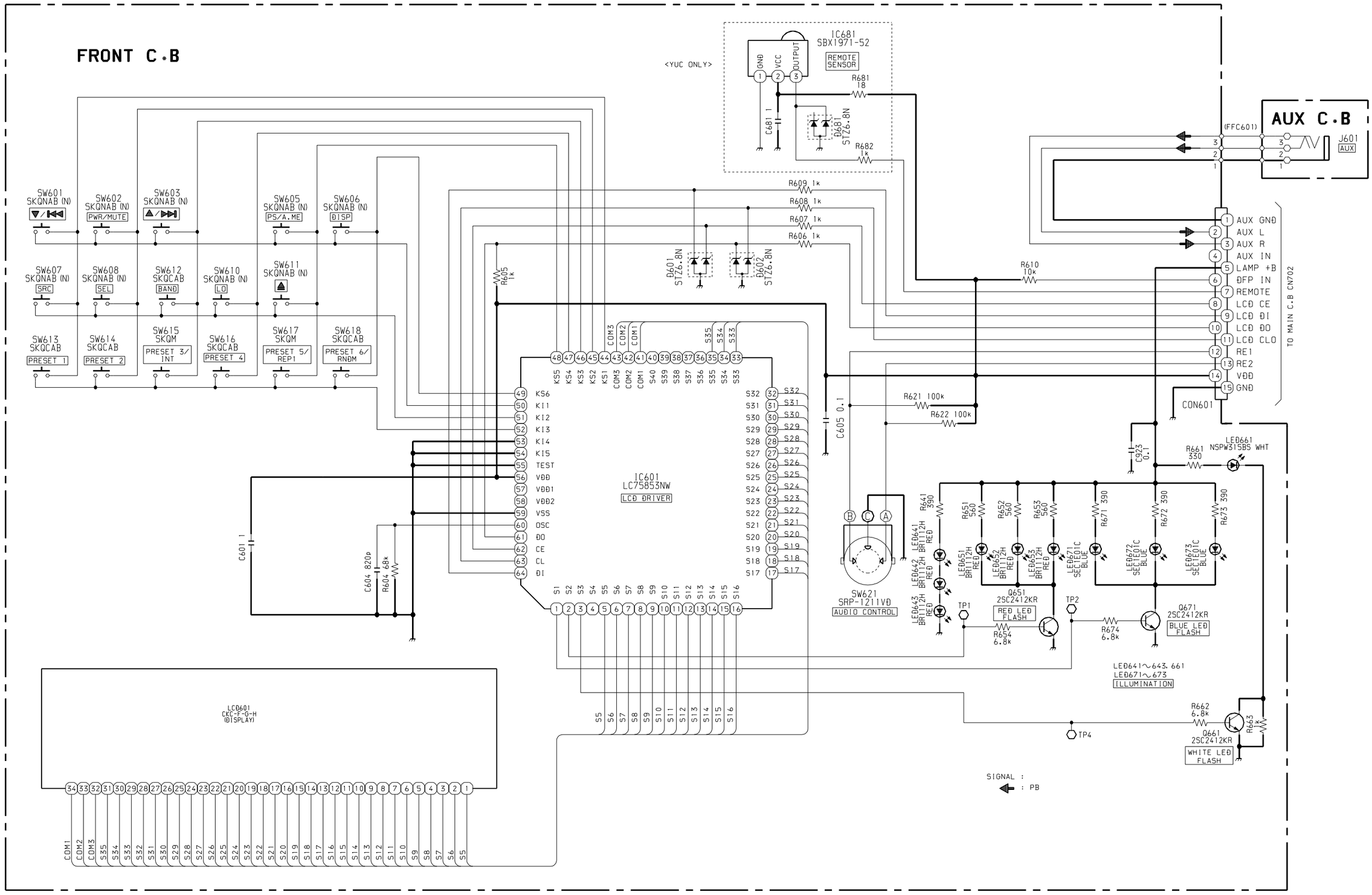

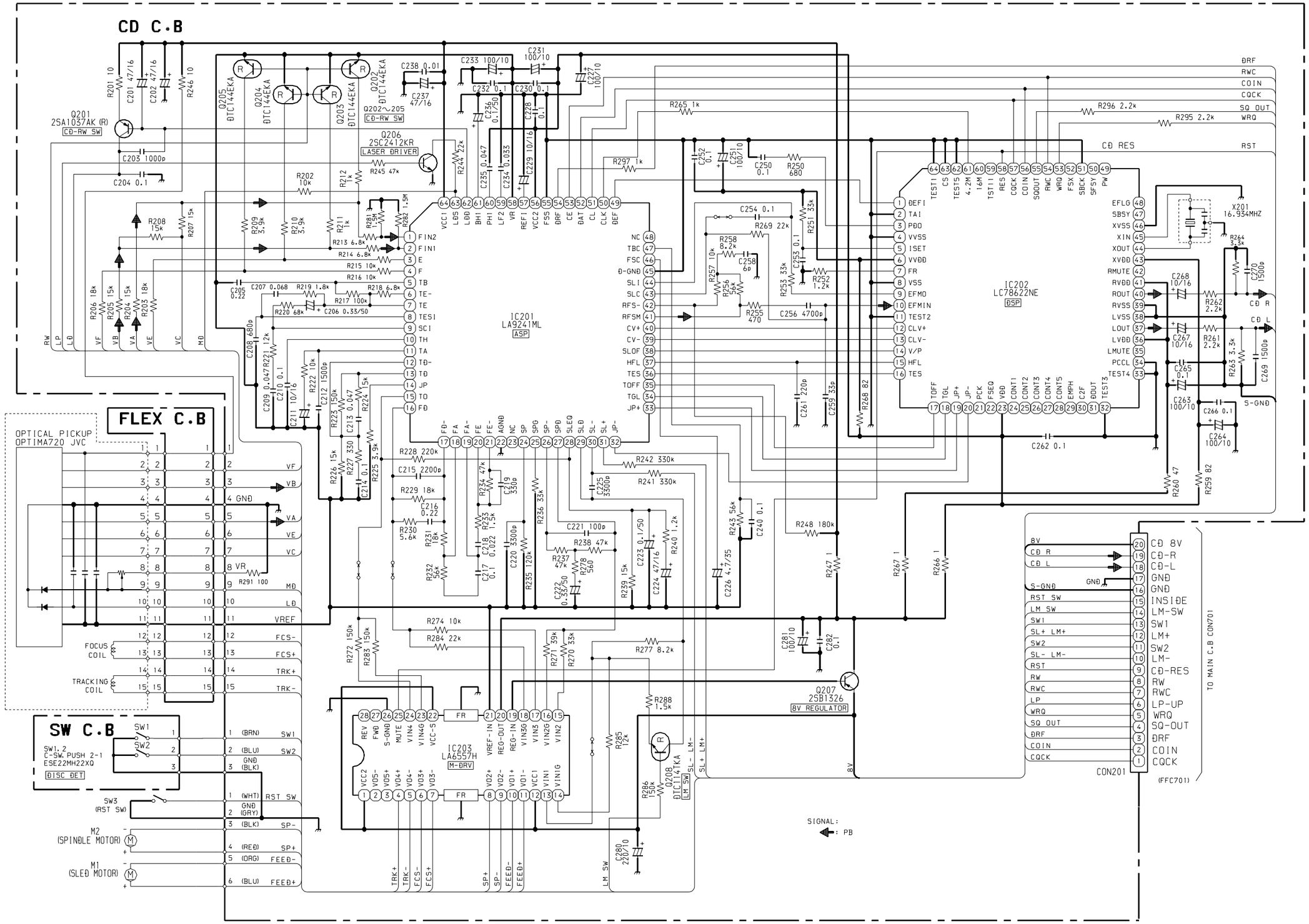
CD C.B
FLEX C.B
SW C.B
IC201
LA9241ML
ASP
IC202
LC78622NE
DSP
IC203
LA6557H
M-DRV
Q201
2SA1037AK (R)
CD-RW SW
Q202~205
CD-RW SW
Q206
2SC2412KR
LASER DRIVER
Q207
2SB1326
8V REGULATOR
Q208
DTC114TKA
LM SW
X201
16.934MHZ
OPTICAL PICKUP
OPTIMA720 JVC
FOCUS COIL
TRACKING COIL
M2
(SPINDLE MOTOR)
M1
(SLED MOTOR)
SW1, 2
C-SW. PUSH 2-1
ESE22MH22XQ
DISC DET
SW3
(RST SW)
CD RES
CON201
(FFC701)
TO MAIN C.B CON701
CD 8V
CD-R
CD-L
GND
INSIDE
LM-SW
SW1
LM+
SW2
LM-
CD-RES
RW
RWC
LP-UP
WRQ
SQ-OUT
DRF
COIN
CQCK
S-GND
SIGNAL:
: PB

MECHANICAL PARTS LIST -1/1

! = ⚠SAFTY PARTS
C = Components marked
All components used on this model at the production line are shown in this service manual.
However, please note that not all components will be available as spare parts for after-sales service.
Components marked S and O are designated as spare parts for service and will be stocked at the spare parts centers.
Components marked X and R are not designated as spare parts for after sales service, and will not be stocked at the spare parts centers.

UNIT-NAME	!	C	REF-NO	PARTS-NO	PARTS-NAME	SUFFIX&MODEL	
						CDC-X527M YUSF	CDC-X527M YHSF
		O	MC1001	8C-KCF-001-010	WINDOW,PANEL X527M	a	b
		O	MC1002	8C-KCG-001-310	CABI,FRONT 16	a	b
		O	MC1003	8C-KCG-002-010	CABI,REAR 16	a	b
		O	MC1004	8C-KCG-011-010	CABI, OV	a	b
		O	MC1005	8C-KCG-035-010	CABI, BASE CKC	a	b
		O	MC1006	8C-KCG-036-010	CABI, TRIM 16	a	b
		O	MC1007	8C-KCF-006-010	BTN,P.SET RPT	a	b
		O	MC1008	8C-KCG-012-210	BTN, OV IN	a	b
		O	MC1009	8C-KCG-013-010	BTN, OV OUT	a	b
		O	MC1010	8C-KCG-014-010	BTN, OV R	a	b
		O	MC1011	8C-KCG-015-010	BTN, OV B	a	b
		O	MC1012	8C-KCG-018-010	BTN,SEESAW L	a	b
		O	MC1013	8C-KCG-019-010	BTN, SQ L	a	b
		O	MC1014	8C-KCG-020-010	BTN, SQ R	a	b
		O	MC1015	8C-KCG-021-010	KNOB,RTRY	a	b
		O	MC1016	8C-KCG-022-010	LENS,RTRY	a	b
		O	MC1017	8C-KCG-023-010	BTN, DETACH	a	b
		X	MC1018	87-B40-154-010	LBL,BAR-CODE CU	a	b
		X	MC1019	87-B40-281-010	LBL,BAR-CODE A 35X8	.	b
		X	MC1020	87-B40-282-010	LBL,BAR-CODE AU 35X8	a	.
						CDC-X527M YUSF	CDC-X527M YHSF
		X	MC1021	8C-KCF-008-010	LBL,SPEC.YU X527M	a	.
		X	MC1022	8C-KCF-009-010	LBL,SPEC.YH X527M	.	b
		X	MC1023	8Z-HC4-028-010	LBL,CLASS 1 & TRIANGLE-G	.	b
		X	MC1024	8Z-KC5-014-010	LBL,DHHS	a	.
		O	MC1025	87-571-032-410	VIT+2-3	a	b
		O	MC1026	8B-ZG3-287-010	S-SCREW,TH1.7-4 0.5	a	b
		O	MC1027	8B-ZG3-607-010	PWB,FLEX PIC 2	a	b
		O	MC1028	8C-KCG-661-010	FF-CABLE,20P 1.0 90MM	a	b
		X	MC1029	A8-CZA-490-040	CZA-4 SNYNF	a	b
		X	MC1030	M8-BZG-391-040	BZG-3 BNF	a	b
		X	MC1031	8A-KC7-224-010	HLDR,P-IC -AC	a	b
		O	MC1032	8A-KC7-230-210	HLDR,TR2 -AC	a	b
		O	MC1033	8A-KCF-230-010	COVER, DUST DFP LOWRAL	a	b
		O	MC1034	8B-KCG-247-010	HLDR,MECHA AS-BC	a	b
		O	MC1035	8B-KCG-253-010	SPR-C,ROTARY -BC2	a	b
		X	MC1036	8C-KCA-212-010	SH,3.2-2.4- 0.2 BLK	a	b
		O	MC1037	8C-KCG-201-010	CHAS, SIDE L C	a	b
		O	MC1038	8C-KCG-202-010	CHAS, SIDE R C	a	b
		O	MC1039	8C-KCG-203-010	CHAS,FRONT G W/O TAP	a	b
		O	MC1040	8C-KCG-205-010	LEVER,DFP LOCK	a	b
						CDC-X527M YUSF	CDC-X527M YHSF
		O	MC1041	8C-KCG-211-010	LENS,LCD	a	b
		O	MC1042	8C-KCG-212-010	CASE,LCD LENS	a	b
		O	MC1043	8C-KCG-213-010	HLDR,LCD L	a	b
		O	MC1044	8C-KCG-214-010	HLDR,LCD R	a	b
		O	MC1045	8C-KCG-215-010	LENS, L	a	b
		O	MC1046	8C-KCG-216-010	LENS, R	a	b
		O	MC1047	8C-KCG-220-010	SPR-C,DETACH HOOK C	a	b
		X	MC1048	8C-KCG-221-010	SH, ADH WINDOW	a	b
		X	MC1049	8C-KCG-223-010	SH,5-10-0.07 BLK	a	b
		X	MC1050	8C-KCG-231-010	SH,LCD COLOR 2	a	b
		X	MC1051	8C-KCG-240-010	PANEL,HT-SINK U4C	a	b
		X	MC1052	8C-KTF-212-010	HLDR,DIN NT	a	b
		X	MC1053	8Z-KC1-234-210	SH,PWB	a	b
		X	MC1054	8Z-KC1-239-010	SH,SBX 1971 -F	a	b
		O	MC1055	8Z-KC1-256-010	COVER, BOTTOM RDS	a	b
		O	MC1056	8Z-KC2-203-210	LEVER,DFP HOOK -C2	a	b
		O	MC1057	8Z-KC2-222-010	SPR-T,DETACH LOCK-C2	a	b
		O	MC1058	8Z-KC2-223-010	SPR-C,DETACH -C2	a	b
		O	MC1059	8C-KCG-651-010	RC UNIT,CD1B	a	b
		O	MC1060	87-081-501-010	VTT+2.6-4	a	b
						CDC-X527M YUSF	CDC-X527M YHSF
		O	MC1061	87-251-097-410	U+3-12	a	b
		O	MC1062	87-432-903-010	WTE,2.6	a	b
		O	MC1063	87-B10-259-010	UT2+3.0-10.0 W/O SLOT (BH TAP)	a	b
		O	MC1064	87-B10-384-010	UIT+2.6-6	a	b
		O	MC1065	87-B10-385-010	UIT+2.6-6 BLK	a	b
		O	MC1066	87-B10-397-010	UTT2+2.6-4 W/O SLOT	a	b
		O	MC1067	8Z-KC1-253-010	S-SCREW,PT 2*8 BH+ BLK	a	b
		O	MC1068	8A-KC7-611-010	F-CABLE,3P (AUX)	a	b
		X	MC1069	8C-KCF-601-010	PWB,MAIN (CKC-15)	a	b
		X	MC1070	8C-KCG-602-010	PWB,COMB 4M FRONT (CKC-16)	a	b
		X	MC1071	8C-KCG-603-010	PWB,FRONT	a	b
		X	MC1072	8C-KCG-604-010	PWB,AUX	a	b

アイワ株式会社
AIWA CO.,LTD.
〒110−8710 東京都台東区池之端1−2−11 ☎03（3827）3111 （代表）
2-11, IKENOHATA 1-CHOME, TAITO-KU, TOKYO 110-8710, JAPAN TEL:03 (3827) 3111

0251431